A PASSION FOR PERFECTION

PFEIFFER VACUUM

PPT 100

Digital Pirani Transmitter

Operating Instructions

EN

Translation of the original instructions

PG 0002 BEN/I (1111)

Table of contents

1 About this manual . . . 3
1.1 Validity . . . 3
1.2 Conventions . . . 3
2 Safety . . . 4
2.1 Safety precautions . . . 4
2.2 Proper use . . . 4
2.3 Improper use . . . 4
3 Product description . . . 5
3.1 Product identification . . . 5
3.2 Function . . . 5
3.3 Range of application . . . 5
4 Transport and storage . . . 6
5 Installation . . . 7
5.1 Vacuum connection . . . 7
5.2 Electrical connection . . . 7
5.3 Removal of components for their maintenance . . . 10
6 Operation . . . 11
6.1 Before switching on . . . 11
6.2 Configuring the data exchange . . . 11
6.3 Pfeiffer Vacuum Protocol for "RS485" . . . 13
6.4 Adjusting the transmitter . . . 14
7 Malfunctions . . . 15
7.1 Rectifying malfunctions . . . 15
8 Maintenance and service . . . 15
9 Accessories . . . 16
10 Technical data and dimensions . . . 17
10.1 Technical data . . . 17
10.2 Dimensions . . . 17
10.3 Gas correction factor . . . 18
Declaration of conformity . . . 19

1 About this manual

1.1 Validity

This operating manual is for customers of Pfeiffer Vacuum. It describes the functioning of the designated product and provides the most important information for safe use of the unit. The description follows applicable EU guidelines. All information provided in this operating manual refer to the current state of the product's development. The documentation remains valid as long as the customer does not make any changes to the product.

Up-to-date operating instructions can also be downloaded from www.pfeiffer-vacuum.com.

1.2 Conventions

Safety instructions

The safety instructions in Pfeiffer Vacuum operating manuals are the result of risk evaluations and hazard analyses and are oriented on international certification standards as specified by UL, CSA, ANSI Z-535, SEMI S1, ISO 3864 and DIN 4844. In this document, the following hazard levels and information are considered:

NOTE
Command or note Command to perform an action or information about properties, the disregarding of which may result in damage to the product.

CAUTION
Possible danger Injuries or property damages can occur.

WARNING
Possible danger Injuries or severe property damages can occur.

Pictograph definitions

Warning of a displayed source of danger in connection with operation of the unit or equipment.

Command to perform an action or task associated with a source of danger, the disregarding of which may result in serious accidents.

Instructions in the text

➔ Work instruction: here you have to do something.

Abbreviations used

PPT: Digital Pirani Transmitter

2 Safety

2.1 Safety precautions

NOTE

Duty to inform

Each person involved in the installation or operation of the unit must read and observe the safety-related parts of these operating instuctions.

➔ The operator is obligated to make operating personnel aware of dangers originating from the unit or the entire system.

The transmitter PPT 100 has been tested and accepted in compliance with EN 61010/ VDE 0411 “Safety Equipment for Electrical Components”.

- Observe the safety and accident prevention regulations.
- Check regularly that all safety precautions are being complied with.
- The unit has been accredited with protection class IP 40. Take necessary measures when installing into ambient conditions, which afford other protection classes.
- Consider possible reactions between the materials and the process media.
- Consider possible reactions of the process media due to the heat generated by the product.
- Do not modify or alter the unit yourself.
- Note the shipping instructions, when returning the unit.
- Inform yourself about a possible contamination before starting work.
- Adhere to the relevant regulations and take the necessary precautions, when handling contaminated parts.
- Communicate the safety instructions to other users.

2.2 Proper use

- Only use the PPT 100 digital transmitter for measuring total pressures in the $1 \cdot 10^{-4}$ ... 1000 mbar range.

2.3 Improper use

Improper use will cause all claims for liability and warranties to be forfeited. Improper use is deemed to be all use for purposes deviating from those mentioned above, especially:

- Connection to pumps or units which are not suitable for this purpose according to their operating instructions.
- Connection to units which have exposed voltage-carrying parts.
- The operation of the devices in potentially radioactive areas.

3 Product description

The digital transmitter PPT 100 consists of a Pirani sensor.

3.1 Product identification

To correctly identify the product when communicating with Pfeiffer Vacuum, always have the information from the rating plate available.

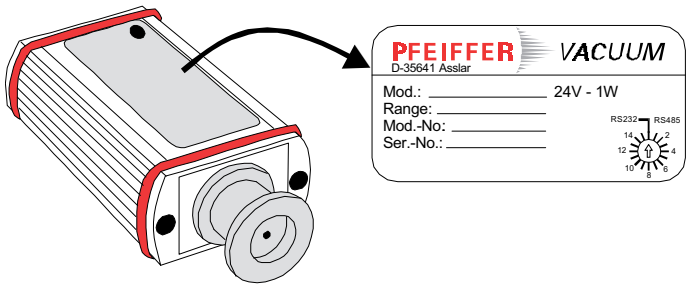

Fig. 1: Product identification on the rating plate

Scope of delivery

The following positions are included in the delivery consignment:

- PPT 100
- Protective cover
- Operating instructions

3.2 Function

The transmitter can be operated in conjunction with the DigiLine Controller, with the DigiLine Power Supply units and the WINDOWS[1)] based measuring software DokuStar (please see "Accessories") on a PC or with customized, digital signal evaluation.

Communication is carried out, depending on the address selector switch setting, via the serial RS-232 interface using the relevant display units or via RS-485 using the Pfeiffer Vacuum protocol. The relevant bus adapters are available for connection to Profibus systems (see Accessories).

The transmitter responds to measurement value queries, type queries and setting commands.

3.3 Range of application

The unit PPT 100 must be installed and operated in the following ambient conditions:

Installation location	weather protected (indoor)
Protection class	IP 40
Installation altitude	max. 2000 m
Ambient temperature	+5°C to +50°C
Relative humidity	5 ... 85 %, non-condensing
Atmospheric pressure	86 kPa - 106 kPa

1) WINDOWS is a registered trademark of Microsoft Corporation.

4 Transport and storage

Units without external protection must not come into contact with electrostatically chargeable materials and must not be moved within electrical or magnetic fields.

➔ In rooms with moist or aggressive atmospheres, the unit must be airproof shrink-wrapped in a plastic bag together with a bag of desiccant.

➔ Keep the original protective covers.

5 Installation

5.1 Vacuum connection

CAUTION

Vacuum component!

Dirt and damage impair the function of the vacuum component.

➔ When handling vacuum components, ensure that they are kept clean and are protected against damage.

➔ Ensure that the connection flange is clean, dry and free of grease.

CAUTION

Excess pressure in the vacuum system 1.5 to 4 bar

Damage to health through emission of process media, because elastomer washers cannot withstand the pressure.

➔ Use sealing rings with an outer centering ring.

Mounting orientation

The installation position can be freely selected. The preferred position is a horizontal to vertical position so that condensate and particles do not penetrate the measurement chamber.

Connecting the transmitter

CAUTION

Excess pressure in the vacuum system > 1 bar

Danger of injuries by inadvertent opening of elements under stress due to parts flying around.

➔ Only use stressed elements, which can be opened and closed with appropriate tools (e.g. strap retainer-tension ring).

➔ Remove the protective cover, which is required during maintenance work.

➔ Make the flange connection.

5.2 Electrical connection

NOTE

Damage to the transmitter!

Only connect the connection cable when de-energized.

➔ Never establish a connection to the transmitter using a live cable.

Communication is effected, depending on the position of the address selector switch at the transmitter, via Serial Interface RS-232 or via the RS-485 (address settable from 1-15).

Setting the address selection switch

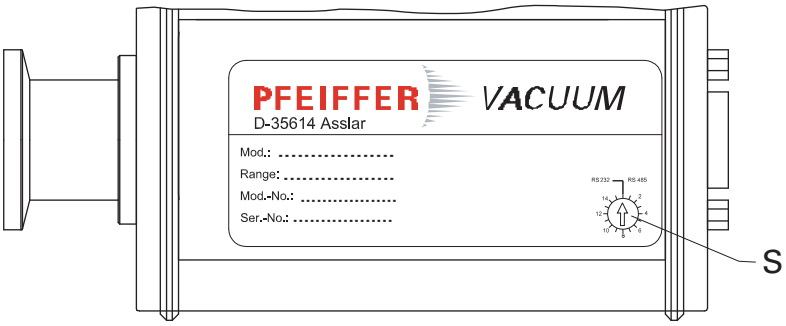

Fig. 2: Setting the address selection switch

➔ Remove the rubber plugs (not shown in the illustration) from the address selector switch, and set the required address according to the relevant connection situation.

Connecting the transmitter to the DPG 101 controller

➔ Set the address selector switch on the transmitter to RS-232 mode (basic factory-setting).

➔ Connect the transmitter to the control unit using the connection cable.

➔ Switch on the control unit.

Connecting the transmitter to the DPG 109 controller

Up to nine transmitters in series can be conneted to the DPG 109 controller.

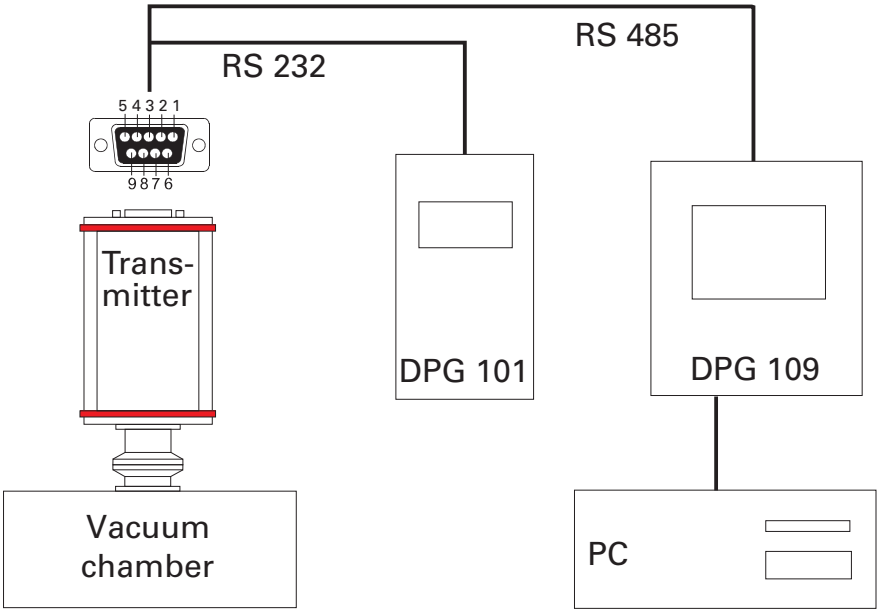

Fig. 3: Connections diagram transmitter-DPG

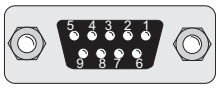

Pin	Assignment
1	not connected
2	RS 232, RxD
3	RS 232, TxD
4	not connected
5	GND
6	V DC
7	RS 485: D-
8	RS 485: D+
9	not connected

➔ Set address selector switch S on the transmitter to RS-485 mode with the relevant address.

➔ Connect the transmitter to the control unit using the connection cable.

➔ Switch on the control unit.

Connecting the transmitter to the DPS 101 power supply

➔ Set the address selector switch on the transmitter to RS-232 mode (basic factory-setting).

➔ Connect the transmitter to the power supply unit and to the RS-232 interface on the PC using the connection cable.

➔ Plug in the power supply unit.

➔ Operate transmitter with software DokuStar (included with DPS 101).

Connecting the transmitter to the DPS 109 power supply

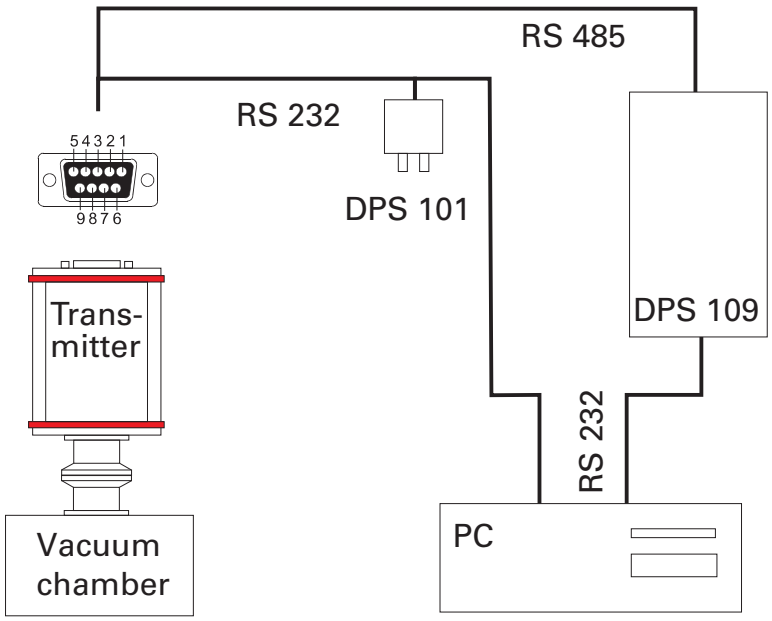

Fig. 4: Connections diagram - DPS 101/DPS 109

➔ Set address selector switch S on the transmitter to RS-485 mode with the relevant address.

➔ Connect the transmitter to the power supply unit and to the RS-232 interface on the PC using the connection cable.

➔ Switch on the supply voltage with switch S1 on the power supply.

➔ Operate the transmitter using the DokuStar Plus software (optional).

Connecting the transmitter to the profibus adapter TIC 252

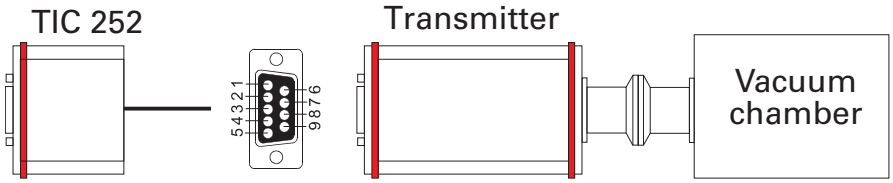

Fig. 5: Connections diagram transmitter - TIC 252

➔ Set the address selector switch on the transmitter to RS-232 mode (basic factory-setting).

➔ Plug the TIC 252 into the D-Sub socket on the transmitter and secure using fixing screws.

➔ Connect the power supply to the TIC 252.

Connecting the transmitter to the level converter TIC 002

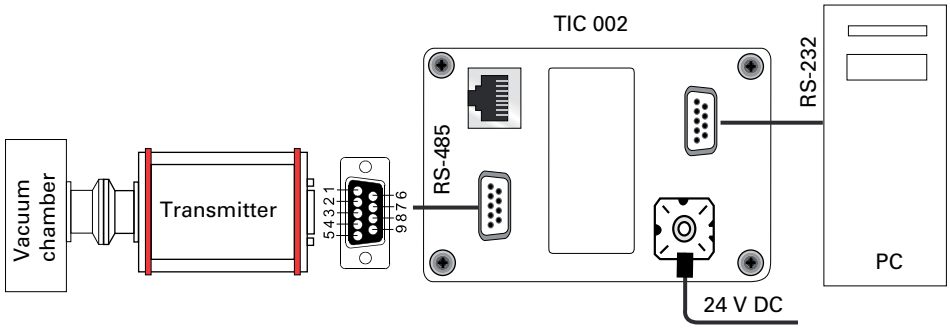

Fig. 6: Connections diagram transmitter - TIC 002

➔ Set address selector switch S on the transmitter to RS-485 mode with the relevant address.

➔ Connect the transmitter to the TIC 002 using the connection cable.

➔ Connect the power supply to the TIC 002.

Connecting the transmitter to the USB/RS-485 converter

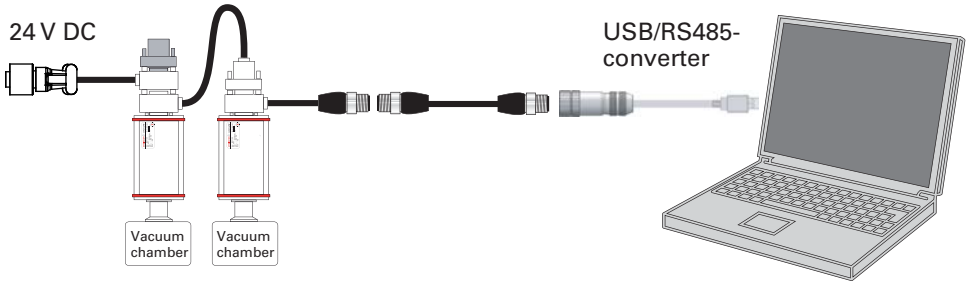

Fig. 7: Connections diagram transmitter - USB/RS-485 converter

➔ Set address selector switch S on the transmitter to RS-485 mode with the relevant address.

➔ Connect the transmitter to the USB/RS-485 converter using the connection cable.

➔ Connect the transmitter to the power supply.

5.3 Removal of components for their maintenance

WARNING

Contamination of transmitter parts possible due to the media measured!

Poisoning hazard through contact with harmful substances.

➔ In the case of contamination, carry out appropriate safety precautions in order to prevent danger to health through dangerous substances.

➔ Decontaminate affected parts before carrying out maintenance work.

➔ Switch off the power supply on the control unit/power supply or disconnect the equipment from the mains supply.

➔ Loosen any connection cables.

➔ Detach the transmitter from the vacuum apparatus.

➔ Close the flange opening by using the original protective cover.

6 Operation

6.1 Before switching on

After switching on the power supply, the transmitter is ready for operation. However, it is advisable to wait for a stabilization period of 5-10 minutes before measurement, and to operate the transmitter without interruption during the measurement process.

The pressure measured in the Pirani range depends on the gas type. To adjust for different gases, a corresponding gas type correction factor can be set on the transmitter; this generates correct measurements in the pressure range below 1 mbar. The gas type correction factor is factory-set for air and N_2 to 1.00 *(see p. 18, chap. 10.3)*.

6.2 Configuring the data exchange

Communication is carried out, depending on the address selector switch setting, via the serial RS-232 interface using the relevant display units or via RS-485 using the Pfeiffer Vacuum protocol:

- 9600 baud
- 8 data bits
- 1 stop bit
- no parity

Parameter overview

#	Name	Data type	Handling	CPT 100	PPT 100	RPT 100	HPT 100	MPT 100
40	DeGas	6 - boolean_new	readable, writable				•	
41	Sensor on/off	7 - u_short_int	readable, writable				•	•
49	Switch mode	7 - u_short_int	readable, writable			•	•	•
303	Actual error code	4 - string	read-only	•	•	•	•	•
312	Software version	4 - string	read-only	•	•	•	•	•
349	Component name	4 - string	read-only	•	•	•	•	•
740	Pressure in [mbar]	10 - u_expo_new	readable, conditionally writable	•	•	•	•	•
741	Pressure set point	7 - u_short_int	only writable	•	•	•	•	•
742	Correction value (Pirani)	2 - u_real	readable, writable		•	•	•	•
743	Correction value (Bayard-Alpert)	2 - u_real	readable, writable				•	
743	Correction value (CC sensor)	2 - u_real	readable, writable					•

Parameters are displayed in square brackets as a three-digit number in bold font. The designation may also be stated if necessary.

Example: **[P:312] Software version**

Reading the actual pressure value [P:740]

Pressure value as the value to be queried and also as equalization (see below) are transmitted by means of a string in the format "**aaaabb**", whereby "**aaaa**" is the mantissa and "**bb**" the exponent with offset 20 of an exponential number. "**aaaa**" is therefore in the range "1000" (for 1.000) to "9999" (for 9.999). The individual characters of the string are the numbers "0" (ASCII 48) to "9" (ASCII 57).

Example: "104223" represents 1.042 x 10^{+3} mbar, "750015" represents 7.500 x 10^{-5} mbar.

Reading error codes [P:303]

Parameter 303 transfers the actual error code of the transmitter. The following error codes can occur:

Value	Meaning
"000000"	No error
"Err001"	Defective transmitter
"Err002"	Defective memory

Error codes

Reading component names [P:349]

Parameter 349 contains a logogram for the component name in accordance with the following table:

Value	Transmitter
".... A1"	CPT 100
".... A2"	RPT 100
".... A3"	PPT 100
".... A4"	HPT 100
".... A5"	MPT 100

"....": means 4 blanks

6.3 Pfeiffer Vacuum Protocol for "RS485"

Telegram frame

The telegram frame of the Pfeiffer Vacuum protocol contains only ASCII code characters [32; 127], the exception being the end character of the message $^{C}_{R}$. Basically, a master 💻 (e.g. a PC) sends a telegram, which is answered by a slave ○ (e.g. electronic drive unit or transmitter).

a2	a1	a0	*	0	n2	n1	n0	l1	l0	dn	...	d0	c2	c1	c0	$^{C}_{R}$

a2 - a0	Unit address for slave ○ – Individual address of the unit ["001";"015"]
*	Action
n2 - n0	Pfeiffer Vacuum parameter numbers
l1 - l0	Data length dn ... d0
dn - d0	Data in data type concerned
c2 - c0	Checksum (sum of ASCII values of cells a2 to d0) modulo 256
C_R	Carriage return (ASCII 13)

Telegrams

Data request 💻⇨○?

a2	a1	a0	0	0	n2	n1	n0	0	2	=	?	c2	c1	c0	$^{C}_{R}$

Control command 💻⇨○!

a2	a1	a0	1	0	n2	n1	n0	l1	l0	dn	...	d0	c2	c1	c0	$^{C}_{R}$

Data response / control command understood ○⇨💻✓

a2	a1	a0	1	0	n2	n1	n0	l1	l0	dn	...	d0	c2	c1	c0	$^{C}_{R}$

Error message ○⇨💻×

a2	a1	a0	1	0	n2	n1	n0	0	6	N	O	_	D	E	F	c2	c1	c0	$^{C}_{R}$
										_	R	A	N	G	E				
										_	L	O	G	I	C				

"NO_DEF"	The parameter n2 - n0 does not exist
"_RANGE"	Data dn - d0 are outside the permitted range
"_LOGIC"	Logic access violation

Telegram examples

Read actual pressure value (data query)

(Parameter **[P:740]**, Slave device address: "001")

💻⇨○?	0	0	1	0	0	7	4	0	0	2	=	?	1	0	6	$^{C}_{R}$
ASCII	48	48	49	48	48	55	52	48	48	50	61	63	49	48	54	13

○⇨💻✓	0	0	1	1	0	7	4	0	0	6	1	0	0	0	2	3	0	2	5	$^{C}_{R}$
ASCII	48	48	49	49	48	55	52	48	48	54	49	48	48	48	50	51	48	50	53	13

Activate/send parameter for atmospheric pressure (high pressure) (control command)

Atmospheric pressure adjustment (Parameter **[P:741/740]**, Slave device address: "001")

💻⇨○?	0	0	1	1	0	7	4	1	0	3	0	0	1	1	3	0	$^{C}_{R}$
ASCII	48	48	49	49	48	55	52	49	48	51	48	48	49	49	51	48	13

○⇨💻✓	0	0	1	1	0	7	4	1	0	3	0	0	1	1	3	0	$^{C}_{R}$
ASCII	48	48	49	49	48	55	52	49	48	51	48	48	49	49	51	48	13

Activate/send parameter for low pressure (control command)

Low pressure adjustment (Parameter **[P:741/740]**, Slave device address: "001")

💻⇨○**?**	0	0	1	1	0	7	4	1	0	3	0	0	0	1	2	9	C_R
ASCII	48	48	49	49	48	55	52	49	48	51	48	48	48	49	50	57	13

○⇨💻✓	0	0	1	1	0	7	4	1	0	3	0	0	0	1	2	9	C_R
ASCII	48	48	49	49	48	55	52	49	48	51	48	48	48	49	50	57	13

Applied data types

Data type	Description	Size l1 - l0	Example
0	False / true	06	000000 / 111111
1	Positive integer number	06	000000 to 999999
2	Positive fixed comma number	06	001571 equal to 15.71
4	Symbol chain	06	TC_400
7	Positive integer number	03	000 to 999
10	Symbol chain	06	100023

6.4 Adjusting the transmitter

The transmitter is factory-calibrated. It may be necessary to calibrate the Pirani sensor in the event of contamination, other installation positions, extreme temperature fluctuations, ageing, etc. This is carried out using the "DokuStar" PC software via a connected control unit or according to customer requirements following the communication instructions.

Before equalization, the transmitter should be operated at the relevant pressure for approx. 5 ... 10 minutes long (warm-up time).

For correct zero point equalization, the pressure in the vacuum chamber must be below $1 \cdot 10^{-5}$ mbar.

With controller DPG 101/DPG 109:

➔ Equalize the transmitter as described in the instructions for the control units.

Via RS-232/RS-485:

➔ Evacuate the vacuum chamber to the pressure $p < 1 \cdot 10^{-5}$ mbar.

➔ Set the pressure adjusting point [P:741] to «000» for low pressure and transmit.

➔ Send actual pressure value ([P:740] with value «000000») for low pressure (corresponds to $p < 1 \cdot 10^{-5}$); ==> "ur" (under range).

➔ Vent vacuum chamber to atmospheric pressure with air or N_2; afterwards wait about 10 minutes.

➔ Set the pressure adjusting point [P:741] to «001» for high pressure and transmit.

➔ Set the actual pressure value to the atmospheric pressure («100023» for 1000 mbar).

7 Malfunctions

7.1 Rectifying malfunctions

Problem	Possible causes	Remedy
Transmitter does not respond	• No supply voltage • Wrong serial interface type or incorrect address set • Transmitter defective	⇨ Connect cable or power supply. ⇨ Set the address selector switch to the serial interface to be used. ⇨ Replace transmitter.
Measurement value shows ur / or, although the pressure is within the transmitters measuring range ($1 \cdot 10^{-4}$ ... 1000 mbar)	• Adjustment necessary • Transmitter defective	⇨ Readjust transmitter. ⇨ Replace transmitter.

8 Maintenance and service

The unit requires no maintenance. A damp cloth can be used to wipe away any dirt.

Do make use of our service facilities:

In the event that repairs are necessary a number of options are available to ensure any unit down time is kept to minimum:

- Return the unit to the manufacturer for repairs;
- Replace with a new value unit.

NOTE

The unit is not prepared for customer repair.

Units returned to us for repair or maintenance are covered by our general conditions of sale and supply.

Sending of units

➔ Download the forms "Service Request" and "Declaration on Contamination".[1)]

➔ Fill out the "Service Request" form and send it by fax or e-mail to your Pfeiffer Vacuum service address.

➔ Include the confirmation on the service request from Pfeiffer Vacuum with your shipment.

➔ Fill out the declaration on contamination and include it in the shipment (required!).

➔ Seal the contaminated unit in suitable protective film.

➔ If possible, send unit in the original packaging.

Service orders

All service orders are carried out exclusively according to our repair conditions for vacuum units and components.

1) Forms under www.pfeiffer-vacuum.com

9 Accessories

Designation	Digital Pirani transmitter
TIC 251, Profibus converter for CPT, PPT, RPT	PT 348 110
TIC 002, converter for DigiLine™ transmitter	PM 051 519-T
Centering ring with poral filter, Pore size: 20 µm, FPM/stainless steel, DN 16 ISO-KF	PF 117 216-T
Fine filter, pore size 4 µm, DN 16 ISO-KF	PT 120 132-T
DPS 101, for 1 transmitter, UK plug	PT G20 012
DPS 101, for 1 transmitter, US plug	PT G20 011
DPS 101, for 1 transmitter, EU plug	PT G20 010
DPS 109, for 9 transmitters	PT G25 010
DPG 101, controller for 1 transmitter	PT G10 010
DPG 109, controller for 9 transmitters	PT G15 010
Connection cable for DPG 101, 3 m	PT 348 203-T
Connection cable for DPG 101, 6 m	PT 348 206-T
Connection cable for DPG 101, 10 m	PT 348 210-T
Connection cable for DPG/DPS 109, 3 m	PT 348 403-T
Connection cable for DPG/DPS 109, 6 m	PT 348 406-T
Connection cable for DPG/DPS 109, 10 m	PT 348 410-T
Plug-in bus termination for RS-485	PT 348 100-T
TIC 252, Profibus converter for HPT, MPT	PT 348 111
USB converter to RS-485 interface	PM 061 207-T
Transmitter adapter cable with RS-485	PT 348 131 -T
Connection cable TPS 110/111/180/181 - Transmitter, 3 m	PT 348 142 -T

10 Technical data and dimensions

10.1 Technical data

Parameter	Digital Pirani transmitter	Digital Pirani transmitter
Flange (in)	DN 16 ISO-KF	DN 16 CF
Protection category	IP 40	IP 40
Seal	Metal	Metal
Pressure max.	4 bar	4 bar
Feedthrough	Glass	Glass
Accuracy: % of measurement	$1 \cdot 10^{-3}$ - 1 mbar: ± 5	$1 \cdot 10^{-3}$ - 1 mbar: ± 5
Weight	0.2 kg	0.2 kg
Materials in contact with media	Tungsten, stainless steel	Tungsten, stainless steel
Measurement range max.	1000 mbar	1000 mbar
Measurement range min.	$1 \cdot 10^{-4}$ mbar	$1 \cdot 10^{-4}$ mbar
Sensor cable length max.	with RS-485: 1000 m	with RS-485: 1000 m
Method of measurement	Pirani	Pirani
Measuring cycle	40 ms	40 ms
Interface: Connection	Digital RS-232 / RS-485, 9-pin, D-sub-socket	Digital RS-232 / RS-485, 9-pin, D-sub-socket
Temperature: Bakeout	70 °C	70 °C
Temperature: Operating	5-50 °C	5-50 °C
Temperature: Storage	-40-+60 °C	-40-+60 °C
Supply: Voltage	24 V DC	24 V DC
Supply: Power consumption max.	2 W	2 W
Repeatability: % of measurement	$1 \cdot 10^{-3}$ - 1 mbar: ± 1	$1 \cdot 10^{-3}$ - 1mbar: ± 1

10.2 Dimensions

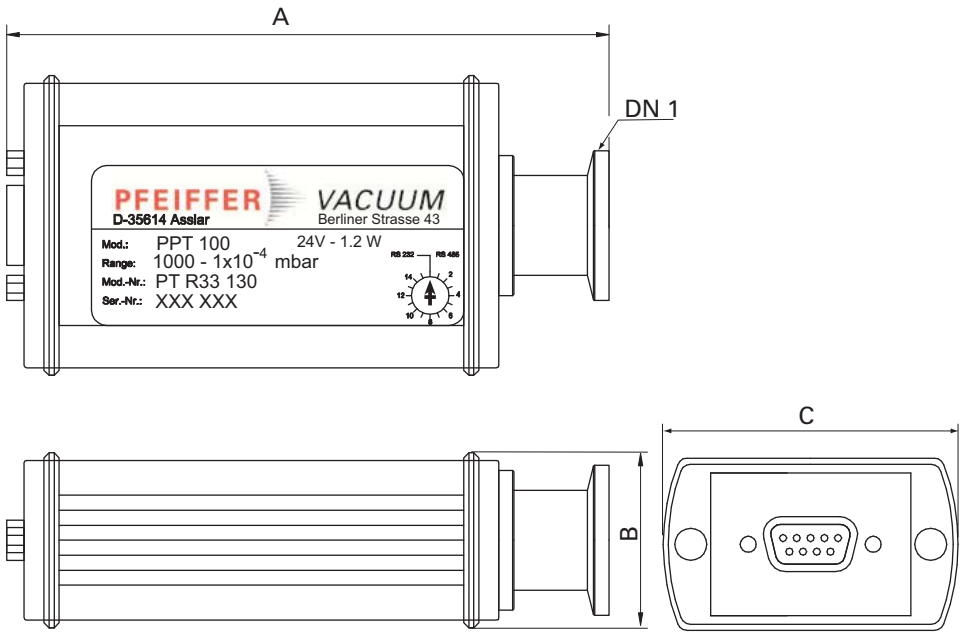

Dimensions	Digital Pirani transmitter	Digital Pirani transmitter
A	120 mm	120 mm
B	35 mm	35 mm
C	60 mm	60 mm
DN1	DN 16 ISO-KF	DN 16 CF

10.3 Gas correction factor

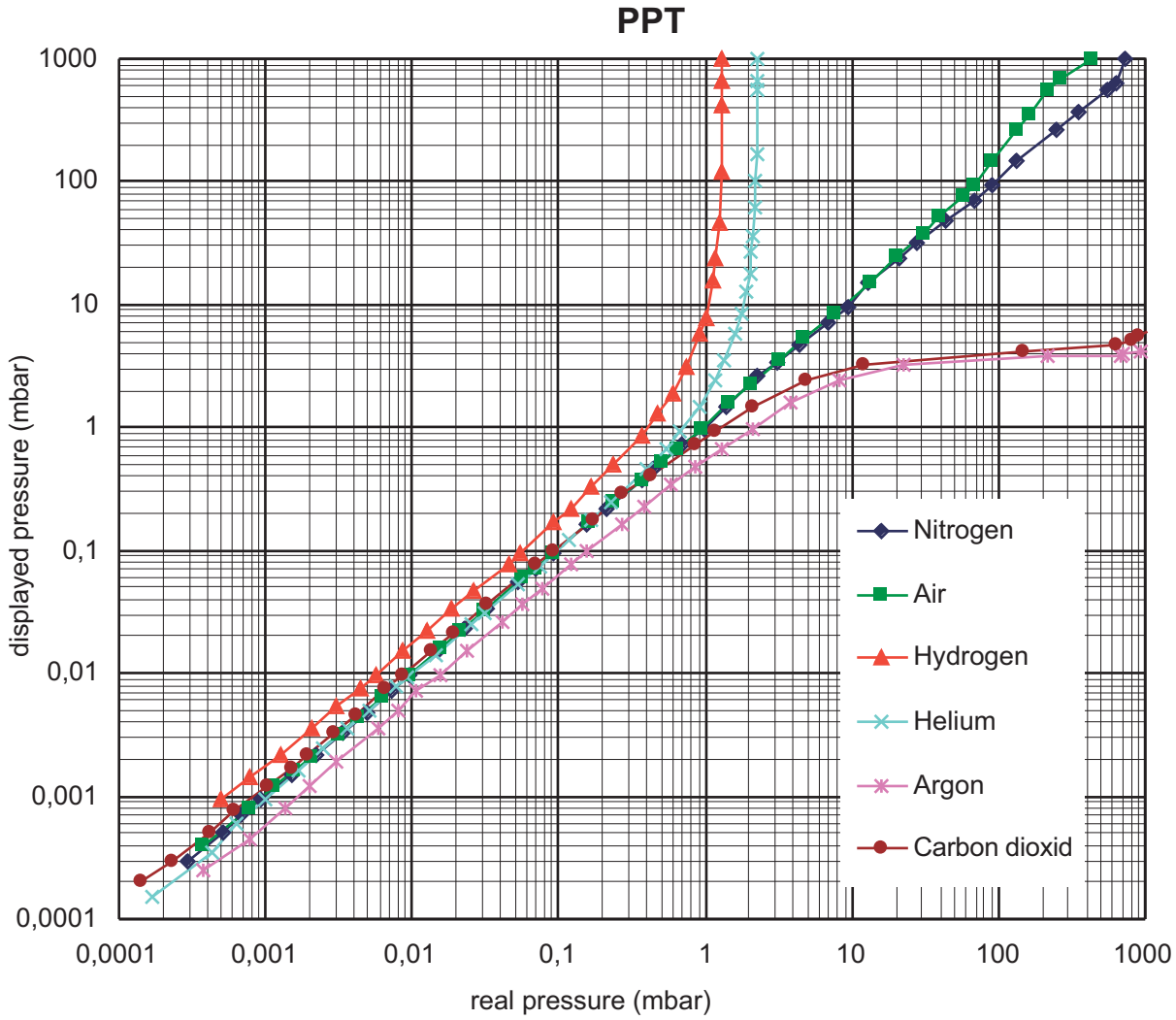

Fig. 8: Dependent on gas type PPT 100 (Pirani)

Pirani correction factor:

N_2	1.00
Air	1.00
H_2	0.58
He	1.02
Ar	1.59
CO_2	0.89

Relative sensitivity in molecular range ($1 \cdot 10^{-1}$ mbar)

Declaration of conformity

according to the EC directive:

- **Electromagnetic Compatibility 2004/108/EC**
- **Low Voltage 2006/95/EEC**

We hereby certify, that the product specified below is in accordance with the provision of EU Electromagnetic Compatibility Directive **2004/108/EEC** and EU Low Voltage Directive **2006/95/EEC**.

DigiLine
PPT 100

Guidelines, harmonised standards and national standards and specifications which have been applied:

DIN EN 61010-1: 2002
DIN EN 61326-1: 2006

Signatures:

Pfeiffer Vacuum GmbH
Berliner Straße 43
35614 Asslar
Germany

(M.Bender)
Managing Director

(Dr. M. Wiemer)
Managing Director

CE/2011

PFEIFFER VACUUM

A PASSION FOR PERFECTION

PFEIFFER VACUUM

Leading. Dependable. Customer Friendly

Pfeiffer Vacuum stands for innovative and custom vacuum solutions worldwide. For German engineering art, competent advice and reliable services.

Ever since the invention of the turbopump, we´ve been setting standards in our industry. And this claim to leadership will continue to drive us in the future.

You are looking for a perfect vacuum solution? Please contact us:

Germany
Pfeiffer Vacuum GmbH
Headquarters
Tel.: +49 (0) 6441 802-0
info@pfeiffer-vacuum.de

Benelux
Pfeiffer Vacuum GmbH
Sales & Service Benelux
Tel.: +800-pfeiffer
benelux@pfeiffer-vacuum.de

China
Pfeiffer Vacuum
(Shanghai) Co., Ltd.
Tel.: +86 21 3393 3940
info@pfeiffer-vacuum.cn

France
Pfeiffer Vacuum France SAS
Tel.: +33 169 30 92 82
info@pfeiffer-vacuum.fr

Great Britain
Pfeiffer Vacuum Ltd.
Tel.: +44 1908 500600
sales@pfeiffer-vacuum.co.uk

India
Pfeiffer Vacuum India Ltd.
Tel.: +91 40 2775 0014
pfeiffer@vsnl.net

Italy
Pfeiffer Vacuum Italia S.p.A.
Tel.: +39 02 93 99 05 1
contact@pfeiffer-vacuum.it

Korea
Pfeiffer Vacuum Korea Ltd.
Tel.: +82 31 266 0741
sales@pfeiffer-vacuum.co.kr

Austria
Pfeiffer Vacuum Austria GmbH
Tel.: +43 1 894 17 04
office@pfeiffer-vacuum.at

Sweden
Pfeiffer Vacuum Scandinavia AB
Tel.: +46 8 590 748 10
sales@pfeiffer-vacuum.se

Switzerland
Pfeiffer Vacuum (Schweiz) AG
Tel.: +41 44 444 22 55
info@pfeiffer-vacuum.ch

United States
Pfeiffer Vacuum Inc.
Tel.: +1 603 578 6500
contact@pfeiffer-vacuum.com

www.pfeiffer-vacuum.com