Betriebsanleitung • Operating Instructions

TIC 250

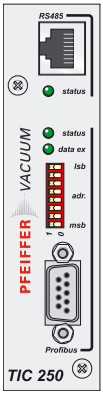

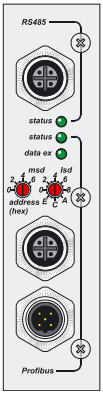

Profibus-DP gateway for Drive Units

PM 0599 BE/E (0506)

PFEIFFER VACUUM

Index

1 About this manual

1.1 Validity

This operating manual is for customers of Pfeiffer Vacuum. It describes the functioning of the designated product and provides the most important information for safe use of the unit. The description follows applicable EU guidelines. All information provided in this operating manual refer to the current state of the product's development. The documentation remains valid as long as the customer does not make any changes to the product.

Up-to-date operating instructions can also be downloaded from www.pfeiffer-vacuum.net.

Associated Documentation

Product	Definition	No. Operating Instr.
Vacuum pump	Description of the pump	dependent on the pump type
DCU 001, 100-600	Description of the controller	PM 0477 BN
Pumping operations with DCU	Operating definitions/parameter	PM 0547 BN
RS 232/485	Pfeiffer Vacuum Protocol	PM 0488 BD

1.2 Conventions

Safety instructions

The safety instruction in Pfeiffer Vacuum operating manuals are the result of risk evaluations and hazard analyses and are oriented on international certification standards as specified by UL, CSA, ANSI Z-535, Semi-S1, ISO 3864 and DIN 4844. In this document, the following hazard levels and information are considered:

CAUTION
Possible danger Medium to slight injuries may occur

NOTE
Command or note Command to perform an action or information about properties, the disregarding of which may result in damage to the product.

Pictograph Definitions

Warning of a displayed source of danger in connection with operation of the unit or equipment.

Important information about a product, handling or applicable part of the documentation to which special attention should be paid

Instructions in the text

➔ Work instruction: here you have to do something.

Abbreviations used

GSD: unit master data

2 Safety

2.1 Safety measures

- Read and follow all points in this manual before installing and placing the unit into operation.
- Observe safety and accident prevention regulations
- Regularly check compliance with all protective measures
- Install the unit while maintaining the specified environmental conditions
  - The protection class of the TIC 250 (PM 051 257 AT) is IP20 (no dust or water protection)
  - The protection class of the TIC 250 (PM 061 100 -T) is IP54 if installed correctly.
- Do not modify or alter the unit yourself.
- Ensure specified mains voltage
- Observe shipping instructions if you have to send in the unit.

2.2 Proper use and operation

The TIC 250 serves to connect the drive units to the Profibus-DP(V0) in accordance with the scope of supply *(siehe S. 4, Kap. 3.1)* . The specified protection class of the TIC 250 **(PM 061 100 -T)** can only be achieved when the rubber stopper is correctly mounted on the address selection switch and the Profibus connectors or the plug with terminating resistor are connected.

2.3 Improper Use

Improper is:

- Uses not covered above, and, in particular:
  - connection to pumps and units which is not permitted in their operating instructions;
  - connection to units which contain touchable and voltage carrying parts.

Improper use will cause any rights regarding liability and guarantees to be forfeited.

3 Product description

The TIC 250 (variant PM 051 257 AT and variant PM 061 100 -T) serves as a connection for the Profibus-DP(V0) bus system for the drive units TC 100, TCK 100, TC 600, TC 750 and TCM 1601. One TIC 250 per drive unit is needed. In the following, the designation “TIC 250” applies to both variants unless otherwise stated.

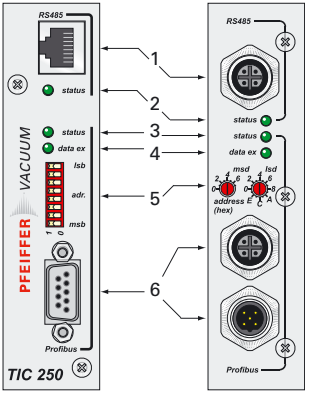

1 RS485 port connection to the drive unit
2 RS485 status LED
3 Profibus-Status-LED
4 data_exchange-LED
5 Address selection switch
6 Profibus port

Abb. 1: Front plates of the TIC 250

3.1 Delivery

Included with the delivery are the following items:

Position	PM 051 257 AT	PM 061 100 –T
TIC 250	•	•
Two top hat rail clamping elements	•	•
One CD with GSD File	•	•
One connecting cable	•	•
Two screws M4 x 65	•	
Two screws M4 x 80	•	
Two screws M4 x 85		•
Two screws M4 x 100		•

3.2 Product identification (type description)

4 Transport and storage

The TIC must be stored and transported in the original packaging and may only be removed from the packaging immediately before installation.

Units without external protection must not come into contact with electrostatically chargeable materials and must not be moved within electrical or magnetic fields.

5 Installation

5.1 Notes on installation

➔ Check whether the required interface address 1 (P797) is set on the drive device (preset at factory).

➔ Do not make any modifications or alterations to the unit yourself.

5.2 Fitting to a top hat rail

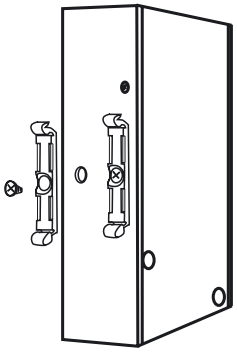

Abb. 2: Fitting to a top hat rail

➔ Screw on the two top hat rail fasteners to the back side of the TIC and clip to the top hat rail.

➔ Connect the Profibus to the Sub-D box. Take account of the relevant regulations.

➔ Connect the Serial Interface RS 485 to the respective connection at the electronic drive unit using a connecting cable *(see p. 22, chap. 12)* .

5.3 Installation on the drive unit TC 600/750

The TIC 250 (PM 051 257 AT) is not protected against penetration by dust or moisture. If in doubt, do not mount the TIC 250 (PM 051 257 AT) on the pump. In this case, mount the TIC on a top hat rail or use a TIC 250 (PM 061 100 -T).

➔ Switch off turbo pump and let it come to a standstill.

➔ Shut off electrical power to the drive unit.

➔ Loosen the two hexagon socket screws on the drive unit.

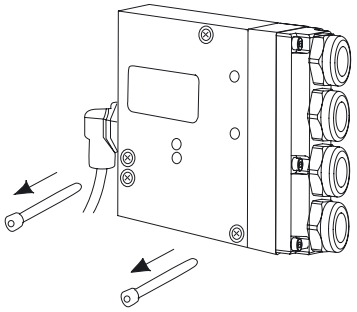

Abb. 3: Remove screws from the drive unit

Installation on the drive unit

➔ Screw the TIC 250 together with the drive unit to the pump with two equally long screws out of the four supplied (length depending on pump type).

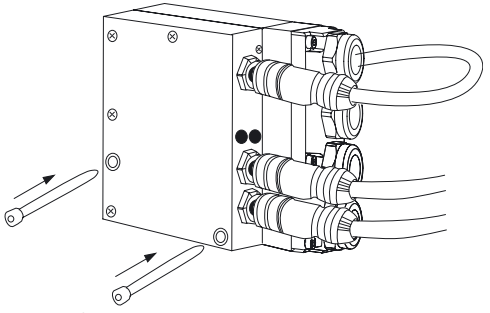

Abb. 4: TIC installation on the drive unit

➔ Make Profibus connection.

➔ With the supplied cable, connect the RS 485 port of the TIC 250 and the corresponding port on the drive unit.

5.4 Profibus port

PM 051 257 AT	Pin	Function	PM 061 100 -T	Pin	Meaning
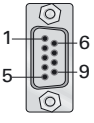	1	Shield	Plug 	1	VP
	2	-		2	RxD/TxD-N
	3	RxD/TxD-P		3	DGND
	4	CNTR-P		4	RxD/TxD-P
	5	DGND		5	Shield
	6	VP	Socket 	Socket and plug are wired in parallel so that they provide the same functions. Profibus connectors and terminating resistors please see accessories.	
	7	-			
	8	RxD/TxD-N			
	9	-			

Address set-up

Setup the Profibus address with the address selector switch using binary coding (for PM 051 257 AT) or hexadecimal coding (for PM 061 100 –T).

➔ Refer to table below for conversion of decimal to hexadecimal addresses.

➔ Fit the rubber stoppers (at PM 061 100 -T) to the address selector switches so as to attain the type of protection stated.

– The stoppers must be inserted straight and as deeply as possible into the holes.

dec.	hex. msd, lsd	bin. msb ... lsb	dec.	hex. msd, lsd	bin. msb ... lsb	dec.	hex. msd, lsd	bin. msb ... lsb	dec.	hex. msd, lsd	bin. msb ... lsb
0	00	00000000	32	20	00100000	64	40	01000000	96	60	01100000
1	01	00000001	33	21	00100001	65	41	01000001	97	61	01100001
2	02	00000010	34	22	00100010	66	42	01000010	98	62	01100010
3	03	00000011	35	23	00100011	67	43	01000011	99	63	01100011
4	04	00000100	36	24	00100100	68	44	01000100	100	64	01100100
5	05	00000101	37	25	00100101	69	45	01000101	101	65	01100101
6	06	00000110	38	26	00100110	70	46	01000110	102	66	01100110
7	07	00000111	39	27	00100111	71	47	01000111	103	67	01100111
8	08	00001000	40	28	00101000	72	48	01001000	104	68	01101000
9	09	00001001	41	29	00101001	73	49	01001001	105	69	01101001
10	0A	00001010	42	2A	00101010	74	4A	01001010	106	6A	01101010
11	0B	00001011	43	2B	00101011	75	4B	01001011	107	6B	01101011
12	0C	00001100	44	2C	00101100	76	4C	01001100	108	6C	01101100
13	0D	00001101	45	2D	00101101	77	4D	01001101	109	6D	01101101
14	0E	00001110	46	2E	00101110	78	4E	01001110	110	6E	01101110
15	0F	00001111	47	2F	00101111	79	4F	01001111	111	6F	01101111
16	10	00010000	48	30	00110000	80	50	01010000	112	70	01110000
17	11	00010001	49	31	00110001	81	51	01010001	113	71	01110001
18	12	00010010	50	32	00110010	82	52	01010010	114	72	01110010
19	13	00010011	51	33	00110011	83	53	01010011	115	73	01110011
20	14	00010100	52	34	00110100	84	54	01010100	116	74	01110100
21	15	00010101	53	35	00110101	85	55	01010101	117	75	01110101
22	16	00010110	54	36	00110110	86	56	01010110	118	76	01110110
23	17	00010111	55	37	00110111	87	57	01010111	119	77	01110111
24	18	00011000	56	38	00111000	88	58	01011000	120	78	01111000
25	19	00011001	57	39	00111001	89	59	01011001	121	79	01111001
26	1A	00011010	58	3A	00111010	90	5A	01011010	122	7A	01111010
27	1B	00011011	59	3B	00111011	91	5B	01011011	123	7B	01111011
28	1C	00011100	60	3C	00111100	92	5C	01011100	124	7C	01111100
29	1D	00011101	61	3D	00111101	93	5D	01011101	125	7D	01111101
30	1E	00011110	62	3E	00111110	94	5E	01011110	andere Adressen ungültig		
31	1F	00011111	63	3F	00111111	95	5F	01011111			

5.5 Configure TIC 250

Before the TIC 250 is placed in operation, it must be configured through a Profibus Master using the accompanying GSD file. For information on this, please see the manual for your Profibus Master and *(siehe S. 9, Kap. 7)* .

6 Operation

➔ Before placing the TIC 250 into operation, set the unique and valid Profibus interface address using the Profibus address selection switch.

NOTE

Changing the address during operation?

Changing the address during operation is not permitted!

➔ Change profibus interface address only when the unit is connected; new address is used only after re-start (power "Off/On").

RS 485 Status LED

Status	Meaning
Off	Unit is not supplied with adequate voltage
Green illuminating	Communication with the electronic drive unit running
Red flashing	Communication with the electronic drive unit is defective
Red illuminatingg	Unit defective
Red 1 x short, 1 x long flashing	An invalid electronic drive unit is connected

Profibus Status LED

Status	Meaning
Off	Unit is not supplied with adequate voltage
Green illuminating	Unit is correctly parametered and configured
Green flashing	Bus traffic detected, unit is not correctly parametered and configured
Red illuminating	Invalid Profibus address
Red flashing	No bus traffic detected
Red 1 x short, 1 x long flashing	Current parameter data are incorrect
Red 2 x short, 1 x long flashing	Current configuration data are incorrect

Data exchange LED

Status	Meaning
Off	The unit is not in the "data exchange" mode
Green illuminating	The unit is in the "data exchange" mode

7 Modules

Different modules are used depending on the type, quantity and data format. The respective range of validity of the parameter values and numbers can be taken from the operating manuals of the used drive units. The following additional points must still be observed:

- A maximum 18 modules are used, which together may contain up to 42 parameters (-> Pxxx) (see also restrictions in the module descriptions *(siehe S. 20, Kap. 9)*).
- Access to the functions in the modules can be influenced by external wiring of the drive unit used (see operating manual of the respective drive unit).

	Modules	Description	I- O- Data (Byte)		General data format
	PPO 1	azyklischer Parameterkanal, control and status word, set and actual rotation speed	12	12	e.g. S7-SPS
or	PPO 3	control and status word, Drehzahlsoll- und Istwert	4	4	
or	control-/status word	control and status word	2	2	
or	control-/status byte	control and status byte	1	1	
or at least one of these modules (refer to the detailed module description)	standard	standard functions	4	3	(low Byte/Word first)
	power	current and Voltage	4	0	
	ophrs_pump	operating hours pump	4	0	
	ophrs_drv	operating hours drive unit	4	0	
	TMS	TMS heating	1	1	
	venting	set-up for automatic venting	0	3	
	fixed_value_out	cyclic parameter write access	0	2	
	fixed_value_in	cyclic parameter read access	2	0	
	fixed_string_out	cyclic parameter write access	0	6	
	fixed_string_in	cyclic parameter read access	6	0	
	random_value_out	acyclic parameter write access	4	4	
	random_value_in	acyclic parameter read access	4	2	
	fail_safe	error handling	0	0	

- **Output data contains data from the master** (e. g. PLC) to TIC.
- **Input data contains** data from the TIC to the master (e. g. PLC).
- **Configuration data contains** identification of the module.
- **Parametering data** contains additional module-specific information.

7.1 PPO 1 module

This module can only be used alone. Various versions are available, depending on the quantity of the parametering data.

It contains the following functions:

- Parameter channel for acyclic writing/reading of individual parameters
- Rotation speed set value/actual value
- Control/status word for general tasks

Output data:

Byte	0	1	2	3	4	5	6	7	8	9	10	11
	Parameter channel								Control word		Rotation speed set value (Hz, WORD)	
	Parameter number and order				Parameter value (DWORD or REAL)							

Input data:

Byte	0	1	2	3	4	5	6	7	8	9	10	11
	Parameter channel								Status word		Rotation speed actual value (Hz, WORD)	
	Parameter number and answer				Parameter value (DWORD or REAL)							

Configuration data F3h, F1h

Parametering data: Additional parameter changes to the pump are made here:

- Settings for the I/O data (see control word / status word)
- Definition of parameters for starting configuration or fail-safe action. A suitable module is used depending on the number of these parameters.

Module							Byte	Meaning	
PPO 1	PPO 1 (1 prm) 1 Parameter	PPO 1 (2 prm) 2 Parameter	PPO 1 (3 prm) 3 Parameter	PPO 1 (4 prm) 4 Parameter	PPO 1 (5 prm) 5 Parameter	PPO 1 (6 prm) 6 Parameter	0	Bit 0: motor pump (P023) • 0: Motor is not influenced • 1: “Pumping station” also controls motor (P023 -> 1) Bit 2-4: venting mode (P030) • 0: controlled venting, • 1: no venting, • 2: venting on Bit 5-7: heating output configuration (P032) • 0: heating / TMS, • 1: purge gas	
							1 – 4	Parameter 1	Number 1)
							5 – 8		Value (DWORD or REAL)
							9 – 12	Parameter 2	Number 1)
							13 – 16		Value (DWORD or REAL)
							17 – 20	Parameter 3	Number 1)
							21 – 24		Value (DWORD or REAL)
							25 – 28	Parameter 4	Number 1)
							29 – 32		Value (DWORD or REAL)
							33 – 36	Parameter 5	Number 1)
							37 – 40		Value (DWORD or REAL)
							41 – 44	Parameter 6	Number 1)
							45 – 48		Value (DWORD or REAL)

1) Parameter number format: DWORD. In addition, the following bits are coded:

Bit	Value	Meaning
31	0	Initial configuration: serves to set parameters that differ from the drive unit’s condition at delivery
	1	Fail-safe-action: only performed if the Profibus connection fails or in the “fail_safe” Profibus condition (a maximum of two parameters can be used). **Caution:** The master can briefly assume this condition when the Profibus starts.
30	0	Value has the data format DWORD
	1	Value has the data format REAL

All drive unit parameters with the data types “boolean_old”, “u_integer”, “u_real”, “boolean_new”, “u_short_int” oder “u_expo_new” can be used *(see p. 20, chap. 9)* . For further references see the associated documentation *(see p. 2, chap. 1.1)* . The parameter values can be specified optionally as either integers (DWORD) or real numbers (REAL).

Parameter channel

Byte	0								1								2	3
Bit	7	6	5	4	3	2	1	0										
	Order / answer				0	Parameter number											0	0
						10	9	8	7	6	5	4	3	2	1	0		

Parameter number and order / answer

Parameters as described under “Parametering data” can be used.

#	Meaning	Related answer	
		Normally	If error
0	No order	0	-
1	Read parameter value	2 or 11	7
3	Write integer parameter value (DWORD)	2	7 or 8
10	Write real-number parameter value (REAL)	11	7 or 8

Order (in the output data)

#	Meaning
0	No answer
2	Transfer integer parameter value (DWORD)
7	Order cannot be carried out; parameter value contains error number (DWORD)
8	No operating control over Profibus
11	Transfer real-number parameter value (REAL)

Answer (in the input data)

#	Meaning
0	Invalid parameter number
1	Parameter value cannot be changed
2	Not within valid value range
5	Incorrect data type
101	Invalid order
102	Parameter value cannot be read

Error number (parameter value in the input data)

Data formats

Byte	n	n + 1	n + 2	n + 3
WORD	high byte	low byte		
DWORD	high word , high byte	high word , low byte	low word , high byte	low word , high byte
REAL	s	exponent	mantissa (IEEE 754)	

Control word / status word:

Bit	Control word (output data)	Status word (input data)
15	-	Reserved (do not evaluate)
14	-	Reserved (do not evaluate)
13	-	0
12	**Venting release** (P012): 0 – no, 1 – yes Set venting mode via parametering data	0
11	**Heating/purge gas** (P001): 0 – off, 1 – on Set mode via parametering data	**Pump turns > 0 Hz:** 0 – no, 1 – yes
10	**Process data release** Control word and parameter channel (only PPO 1) 0 – ignore, 1 – accept	**Set rotation speed reached** (P306): 0 – no, 1 – yes
9	-	**Process data**released: 0 – no, 1 – yes
8	**Standby** (P002): 0 - no, 1 - yes	**Rotation speed switchpoint reached** (P302): 0 – no, 1 – yes
7	**Malfunction acknowledgement** (P009) at 0->1 After acknowledgement, the pumping station must be switched off and switched back on again	**Warning** (P303): 0 – no, 1 – yes
6	**Rotation speed specification** (P026) 0 – final rotation speed 1 – rotation speed from rotation speed set value	**Switch-on block** Re-start only by switching pumping station off and back on
5	-	1
4	-	1
3	-	**Error** (P303): 0 – no, 1 – yes
2	-	**Operation** No error; pumping station and motor, if applicable, are on
1	-	0
0	**Pumping station** (P010): 0 – off, 1 – on Set pump motor control via parametering data	**Ready to switch on** No error; no switch-on block; process data release

7.2 “PPO 3” module

This module can only be used alone. Various versions of this module are available, depending on the quantity of the parametering data. It contains the following functions:

- Control/status word for general tasks
- Rotation speed set value/actual value

Output data:

Byte	0	1	2	3
	Control word siehe S. 9, Kap. 7.1 "PPO 1 module"		Rotation speed set value (Hz, WORD)	

Input data:

Byte	0	1	2	3
	Status word siehe S. 9, Kap. 7.1 "PPO 1 module"		Rotation speed actual value (Hz, WORD)	

Configuration data F1h

Parametering data: Here, the modules are called “PPO 3”, “PPO 3 (1 prm)” … “PPO 3 (6 prm)”; siehe S. 9, Kap. 7.1 "PPO 1 module".

7.3 “Control /status word” module

This module contains a control/status word for general tasks. This module can only be used alone. Various versions of this module are available, depending on the quantity of the parametering data.

Output data:

Byte	0	1
	Control word (siehe S. 9, Kap. 7.1 "PPO 1 module"), rotation speed specification function has no effect	

Input data:

Byte	0	1
	Status word (siehe S. 9, Kap. 7.1 "PPO 1 module")	

Configuration data

0xF0

Parametering data:

Here, the modules are called “control/status word”, “control/status word (1 prm)” … “control/status word (6 prm)”, siehe S. 9, Kap. 7.1 "PPO 1 module".

7.4 Modul „control-/status byte”

This module contains a control/status byte for general tasks and can only be used alone. Various versions of this module are available, depending on the quantity of the parametering data.

Output data/input data

Bit	Control byte (output data)	Status byte (input data)
7	**Malfunction acknowledgement** (P009) at 0->1 After acknowledgement, the pumping station must be switched off and back on again	**General warning** (P303): 0 – no, 1 – yes
6	**Standby** (P002): 0 – no, 1 – yes	**Warning temperature:** 0 – no, 1 – yes
5	**Venting release** (P012): 0 – no, 1 – yes Set venting mode via parametering data	**Operation** No error; pumping station and motor, if applicable, are on
4	**Heating/purge gas** (P001): 0 – off, 1 – on Set mode via parametering data	**Rotation speed switchpoint reached** (P302): 0 – no, 1 – yes
3	-	**Error** (P303): 0 – no, 1 – yes
2	**Process data release**Ignore 0 – bits 7, 6, 5, 4, 0 Accept 1 – bits 7, 6, 5, 4, 0	0
1	-	**Pump turns > 0 Hz:** 0 – no, 1 – yes
0	**Pumping station** (P010): 0 – off, 1 – on Set pump motor control via parametering data	**Set rotation speed reached** (P306): 0 – no, 1 – yes

Configuration data 0xB0

Parametering data: Here, the modules are called “control/status byte”, “control/status byte (1 prm)” ... “control/status byte (6 prm)”, siehe S. 9, Kap. 7.1 "PPO 1 module".

7.5 Module „standard”

This module must always be configured first in Intel data format and must be used only once.

Output data:

Byte	0								1	2
Bit	7	6	5	4	3	2	1	0		
	a	b	c	d	e	f	g	-	i	j

a) Pre-selection heating (-> P001): 0 – off, 1 – on

b) Stand by (-> P002): 0 – off, 1 – on

c) Error acknowledgement (-> P009): only when a malfunction is present to 1, otherwise 0

d) Pumping station (-> P010): 0 – off, 1 – on

e) Motor (-> P023): 0 – off, 1 – on

f) Operating mode pump (-> P026): 0 – final rotation speed mode, 1 – rotation speed setting mode (see pos. i:)

g) Run-up time monitoring (-> P004): 0 – off, 1 – on

h) -

i) Set rotation speed as a % of the final rotation speed (-> rounded P707), only then valid in rotation speed setting mode (f: is switched to 1)

j) Rotation speed switch point as a % of the final rotation speed (-> P701)

NOTE

Incorrect communication!

The fields "i" and j" must always be filled with valid values (for example 50), even though these functions are not used.

Input data:

Byte	0								1	2	3			
Bit	7	6	5	4	3	2	1	0			7	6	5	4 ... 0
	a	b	c	d	e	-	-	-	f	g	i	j	k	h

a) Unit remote controlled (-> P300): 0 – no, 1 – yes

b) Switchpoint attained (-> P302): 0 – no, 1 – yes

c) Set rotation speed attained (-> P306): 0 – no, 1 – yes

d) Pump accelerates (-> P307): 0 – no, 1 – yes

e) TMS controler responded (-> P333): 0 – no, 1 – yes

f) Actual rotation speed as a % of the final rotation speed

g) Error/Warning number (low byte): 0 – no error, 1...999 – error 1...999, 1001...1999 – warning 1...999

h) Error/Warning number (high byte)

i) Status oil sensor (-> P301): 0 - oil, 1 - oil deficiency

j) Excess temperature pump (-> P305): 0 – no, 1 – yes

k) Excess temperature elektronics (-> P304): 0 – no, 1 – yes

Configuration data: C1h, 02h, 83h, 01h

7.6 Module „power”

This module may only be used a maximum of once.

Input data:

Byte	0	1	2	3
	Current in 10 mA (-> P310)		Voltage in 10 mV (-> P313)	
	low byte	high byte	low byte	high byte

Configuration data: 41h, 41h, 02h

7.7 Module „ophrs_ pump”

This module may only be used a maximum of once.

Input data: Operating hours of the pump (-> P311)

Byte	0	1	2	3
	low word / low byte	low word / high byte	high word / low byte	high word / high byte

Configuration data: 41h, 83h, 03h

7.8 Module „ophrs_drv”

This module may only be used a maximum of once.

Input data: Operating hours of the pump (-> P314)

Byte	0	1	2	3
	low word / low byte	low word / high byte	high word / low byte	high word / high byte

Configuration data: 41h, 83h, 04h

7.9 Modul „tms”

This module may only be used a maximum of once.

Output data:

Byte	0
	Set value TMS heating in °C (-> P704)

Input data:

Byte	0
	Actual value TMS heating in °C (-> P331)

Configuration data: C1h, 00h, 00h, 05h

7.10 Module „venting”

This module may only be used a maximum of once.

Output data:

Byte	0	1	2
	Venting frequency as a % of the final rotation speed (-> P720)	Venting time in s (-> P721)	
		low byte	high byte

Configuration data: 81h, 82h, 06h

7.11 Module „fixed_value_out”

With this module an additional parameter can be described the parameter number of which is stated in the parameter data (low byte first). The output data must then contain a valid setpoint. For possible parameters *(see p. 20, chap. 9)* .

Output data: Parameter value

Byte	0	1
	low byte	high byte

Configuration data: 81h, C0h, 07h

Parametering data: Parameter number

Byte	0	1
	low byte	high byte

7.12 Module „fixed_value_in”

With this module an additional parameter can be read the parameter number of which is stated in the parameter data (low byte first). The input data then contain the current value. For possible parameters *(see p. 20, chap. 9)* .

Input data: Parameter value

Byte	0	1
	low byte	high byte

Configuration data: 41h, C0h, 08h

Parametering data: Parameter number

Byte	0	1
	low byte	high byte

7.13 Module „fixed_string_out”

With this module an additional parameter can be read the parameter number of which is stated in the parameter data (low byte first). The input data then contain the current value. For possible parameters *(see p. 20, chap. 9)* .

Output data:

Parameter value

Byte	0	1	2	3	4	5
	string, as transmitted in the Pfeiffer telegram *(see p. 2, chap. 1.1)*					

Configuration data: 81h, 85h, 09h

Parametering data:

Parameter number

Byte	0	1
	low byte	high byte

7.14 Module „fixed_string_in”

With this module an additional parameter can be read the parameter number of which is stated in the parameter data (low byte first). The input data then contain the current value. For possible parameter *(see p. 20, chap. 9)* .

Input data:

Parameter value

Byte	0	1	2	3	4	5
	string, as transmitted in the Pfeiffer telegram					

Configuration data: 41h, 85h, 0Ah

Parametering data:

Parameter number

Byte	0	1
	low byte	high byte

7.15 Module „random_value_out”

This module may be used for acyclic parameter write access of parameters whose value is between 0 and 65535 *(see p. 20, chap. 9)* . The write command is valid, if the input data correspond to the output data.

Output data:

Byte	0	1	2	3
	Parameter number		Parameter value	
	low byte	high byte	low byte	high byte

Input data:

Byte	0	1							2	3
Bit		7	6	5	4	3	2	1	0		

	Parameter number	Status	P. number	Parameter value	
	low byte		high nibble	low byte	high byte

Status:

Value	Description
0	Addressed parameter does not exist
1	Parameter does not exist
2	parameter value is outside the permissible limits
3	Access error
4	Invalid daten type

Configuration data: C1h, C1h, C1h, 0Bh

7.16 Module „random_value_in”

This module may be used for acyclic parameter read access of parameters whose value is between 0 and 65535 *(see p. 20, chap. 9)* . The parameter value is valid, if the parameter number of the input data correspond to the parameter number of the output data.

Output data:

Parameter number

Byte	0	1
	low byte	high byte

Input data:

Byte	0	1								2	3
Bit		7	6	5	4	3	2	1	0		
	Parameter number	Status				P. number				Parameter value	
	low byte					high nibble				low byte	high byte

Status: *(see p. 17, chap. 7.15)* .

Configuration data: C1h, 40h, C1h, 0Ch

7.17 Module „fail_safe”

Use this module to specify which actions the TIC shall perform in the Profibus status fail_safe", for example switch pump off in case the Profibus connection fails. In the parametering data, the parameter number and the parameter value are stated which shall be written in this case. As to the possible parameters *(see p. 20, chap. 9)* .

NOTE

Master may possibly attain during starting of the Profibus the status fail_safe!

In this case the fail_safe modules are executed automatically.

This module must always be configured last and can be used up to four times in the configuration.

Configuration data: 00h

Parametering data:

Byte	0	1	2	3
	Parameter number		Parameter value	
	low byte	high byte	low byte	high byte

8 Extended diagnosis data

Byte	Meaning
0 … 5	Laid down via the Profibus standard
6	Length of the external diagnosis data (in place: n – 6)

7	Bit	7	6	5	4	3	2	1	0
	Meaning	Error number drive unit, Bit 3 – 0				TIC status (0: ok, ≠0: internal error)			

8	Error number drive unit, Bit 11 – 4
9	First module: module number
10	First module: module status

Status	Meaning
0	No module assigned
1	Module status ok
2	At least one parameter which is assigned to this module is not supported by the connected electronic drive unit.
3	The parameter number selected in this module does not exist
4	Invalid parameter value
5	Access logic error has occured. It has been attempted to write to a parameter which is only readable or a parameter value to read which is only writable
6	This module does not support the data type of the addressed parameter
7	The "standard module" is not located in the first connection slot
8	An error has been acknowledged althoug no error has occured
9	The maximum number of permissible "fail_safe modules" has been exceeded
10	Unknown module
13	The maximum permissible number of the requested parameter numbers has been exceeded
14	Modules which may use once, are used multiple
15	This module cannot be used for the connected drive unit
16	Inadmissible combination of modules

11	Second module (if selected): module number
12	Second module (if selected): modul status (like first Modul)
…	
n – 2	xtes module (if selected): modul number
n – 1	xtes module (if selected): modul status (like first Modul)

9 Valid parameters

#	Name	TC(K) 100	TC 600/750	TCM 1601	Data type	already included in module	usable in module						
							(see p. 16, chap. 7.11)	*(see p. 16, chap. 7.12)*	*(see p. 17, chap. 7.13)*	*(see p. 17, chap. 7.14)*	*(see p. 17, chap. 7.15)*	*(see p. 18, chap. 7.16)*	*(see p. 18, chap. 7.17)*
1	Preselection heating	•	•	•	boolean_old	*(see p. 14, chap. 7.5)*	•	•	•	•	•	•	•
2	Standby	•	•	•	boolean_old	*(see p. 14, chap. 7.5)*	•	•	•	•	•	•	•
4	Startup time monitoring	•	•	•	boolean_old	*(see p. 14, chap. 7.5)*	•	•	•	•	•	•	•
9	Error acknowledgement	•	•	•	boolean_old	*(see p. 14, chap. 7.5)*	•		•		•		•
10	Pumping station	•	•	•	boolean_old	*(see p. 14, chap. 7.5)*	•	•	•	•	•	•	•
12	Venting release	•	•		boolean_old		•	•	•	•	•	•	•
13	Preselection brake		•	•	boolean_old		•	•	•	•	•	•	•
23	Motor Pump		•	•	boolean_old	*(see p. 14, chap. 7.5)*	•	•	•	•	•	•	•
24	Configuration Output 1		•	•	u_short_int		•	•			•	•	•
25	Operating mode backing pump	•	•	•	u_short_int		•	•			•	•	•
26	Operating mode turbo pump	•	•	•	u_short_int	*(see p. 14, chap. 7.5)*	•	•			•	•	•
27	Gas mode	•	•	•	u_short_int		•	•			•	•	•
28	Operating mode remote	•	•	•	u_short_int		•	•			•	•	•
29	Operating mode drive unit	•	•		boolean_old		•	•			•	•	•
30	Venting mode	•	•	•	u_short_int		•	•			•	•	•
32	Configuration output K4		•		u_short_int		•	•			•	•	•
35	Configuration accessory 1	•			u_short_int		•	•			•	•	•
36	Configuration accessory 2	•			u_short_int		•	•			•	•	•
55	Configuration analog output 1	•			u_short_int		•	•			•	•	•
300	Unit remote controlled	•	•	•	boolean_old	*(see p. 14, chap. 7.5)*		•		•		•	
301	Oil deficiency turbo pump		•		boolean_old	*(see p. 14, chap. 7.5)*		•		•		•	
302	Rotation speed switch point attained	•	•	•	boolean_old	*(see p. 14, chap. 7.5)*		•		•		•	
303	Actual error code	•	•	•	string	*(see p. 14, chap. 7.5)*		•		•			
304	Overtemperature drive unit	•	•	•	boolean_old	*(see p. 14, chap. 7.5)*		•		•		•	
305	Overtemperature pumps	•	•	•	boolean_old	*(see p. 14, chap. 7.5)*		•		•		•	
306	Set rotation speed attained	•	•	•	boolean_old	*(see p. 14, chap. 7.5)*		•		•		•	
307	Pump accelerates	•	•	•	boolean_old	*(see p. 14, chap. 7.5)*		•		•		•	
308	Set rotation speed (Hz)	•	•	•	u_integer			•		•		•	
309	Actual rotation speed (Hz)	•	•	•	u_integer	*(see p. 14, chap. 7.5)* (in %)		•		•		•	
310	Motor current (10 mA)	•	•	•	u_real	*(see p. 15, chap. 7.6)*		•		•		•	
311	Operating hours pump (h)	•	•	•	u_integer	*(see p. 15, chap. 7.7)*		•		•		•	
312	Software version drive unit	•	•	•	string					•			
313	Motor voltage (10 mV)	•	•	•	u_real	*(see p. 15, chap. 7.6)*		•		•		•	
314	Operating hours drive unit (h)	•	•		u_integer	*(see p. 15, chap. 7.8)*		•		•		•	

#	Name	TC(K) 100	TC 600/750	TCM 1601	Data type	already included in module	usable in module						
315	Final rotation speed pump (Hz)	•	•	•	u_integer			•		•		•	
316	Motor power (W)	•	•	•	u_integer			•		•		•	
319	Cycle counter	•	•		u_integer			•		•		•	
331	Heating TMS, actual value (°C)		•	•	u_integer	*(see p. 15, chap. 7.9)*		•		•		•	
333	TMS controller steady state		•	•	boolean_old	*(see p. 14, chap. 7.5)*		•		•		•	
334	Max. TMS temp. occured (°C)		•	•	u_integer			•		•		•	
335	Heating type		•	•	u_short_int			•				•	
349	Unit type drive unit	•	•	•	string					•			
360	Malfunction mem., pos. 1	•	•	•	string			•		•			
361	Malfunction mem., pos. 2	•	•	•	string			•		•			
362	Malfunction mem., pos. 3	•	•	•	string			•		•			
363	Malfunction mem., pos. 4	•	•	•	string			•		•			
364	Malfunction mem., pos. 5	•	•	•	string			•		•			
365	Malfunction mem., pos. 6	•	•	•	string			•		•			
366	Malfunction mem., pos. 7	•	•	•	string			•		•			
367	Malfunction mem., pos. 8	•	•	•	string			•		•			
368	Malfunction mem., pos. 9	•	•	•	string			•		•			
369	Malfunction mem., pos. 10	•	•	•	string			•		•			
700	Max. run-up time (min)	•	•	•	u_integer		•	•	•	•	•	•	•
701	Switchpoint (in %) of final rotation speed	•	•	•	u_integer	*(see p. 14, chap. 7.5)*	•	•	•	•	•	•	•
704	Heating TMS, set value (°C)		•	•	u_integer	*(see p. 15, chap. 7.9)*	•	•	•	•	•	•	•
707	Rotation speed set value (0,01 %)	•	•	•	u_real	*(see p. 14, chap. 7.5)* (in %)	•	•	•	•	•	•	•
708	Set power (%)	•	•		u_short_int		•	•			•	•	•
710	Pmin for interval operation of backing pump (W)	•	•		u_integer		•	•	•	•	•	•	•
711	Pmax for interval operation of backing pump	•	•		u_integer		•	•	•	•	•	•	•
717	Standby frequency (%)	•	•		u_short_int		•	•			•	•	•
720	Venting frequency (%)	•	•	•	u_short_int	*(see p. 16, chap. 7.10)*	•	•			•	•	•
721	Venting time (s)	•	•	•	u_integer	*(see p. 16, chap. 7.10)*	•	•	•	•	•	•	•
738	Pressure gauge type			•	string				•	•			
797	Unit address RS485	•	•	•	u_integer		•	•	•	•	•	•	•
918	Unit address Profibus	•	•	•	only 7.1 PPO 1 module								
947	Actual error code	•	•	•									
967	Control word	•	•	•									
968	Status word	•	•	•									

10 Maintenance and service

The unit requires no maintenance. A damp cloth can be used to wipe away any dirt which has collected on the front panel.

Do make use of our service facilities:

In the event that repairs are necessary a number of options are available to ensure any system down time is kept to minimum:

- Return the unit to the manufacturer for repairs;
- Replace with a new value unit.

Local Pfeiffer Vacuum representatives can provide full details.

NOTE

The unit is not prepared for customer repair.

Units returned to us for repair or maintenance are covered by our general conditions of sale and supply.

11 Troubleshooting

Problem	Possible cause	Remedy
Parameter errors	Format of the parameter numbers incorrect (e.g. low and high byte exchanged)	Specify parameter numbers according to the format specified in the modules
	Parameterised parameter number does not exist when the drive unit is connected	Use other parameters
Read-in data are not plausible	Low and high byte of the data exchanged	Evaluate data according to the format specified in the modules
Device not visible on the Profibus	Terminating resistor switched on	Switch on terminating resistor only at the ends of the bus
	Drive unit off	Switch on drive unit
Unit does not react to Profibus, although no error is displayed	Other interfaces on the drive unit (e.g. remote) influence behaviour	Do not use interfaces other than Profibus

12 Accessories

Description	PM 051 257 AT	PM 061 100 -T	Number
Connecting cable 3 m	•		P0 993 595
Connecting cable 5 m	•		P0 993 596
Connecting cable 10 m	•		P0 993 597
Connecting cable 20 m	•		P0 993 599
Connecting cable 3 m		•	PM 051 726 –T
Profibus connectos (male and female) M12B		•	PM 051 927 –T
Profibus connector (female) and termination resistor M12		•	PM 051 928 -T

13 Technical data

Description	Unit	PM 051 257 AT	PM 061 100 -T
Profibus version		DP-V0	
Baud rate	baud	9,6 k; 19,2 k; 45,45 k; 93, 75 k; 187,5 k; 500 k; 1,5 M; 3 M; 6 M; 12 M	
Permissible ambient temperature	°C	5 ... 40	
Max. relative humidity (non condensing)	% (bei 5 – 40 °C)	5 ... 85	
Air pressure	kPa	86 ... 106	
Protection type		IP20	IP54
Dimensions (without connectors and top hat rail clamping elements)	mm	B 30 x H 120 x T 95	

Vacuum is nothing, but everything to us!

- Turbopumps
- Rotary vane pumps
- Roots pumps
- Dry compressing pumps
- Leak detectors
- Valves
- Components and feedthroughs
- Vacuum measurement
- Gas analysis
- System engineering
- Service

PFEIFFER VACUUM

Pfeiffer Vacuum Technology AG · Headquarters/Germany
Tel. +49-(0) 64 41-8 02-0 · Fax +49-(0) 64 41-8 02-2 02 · info@pfeiffer-vacuum.de · www.pfeiffer-vacuum.net