Operating Instructions
Incl. Declaration of Conformity

PFEIFFER VACUUM

SingleGauge™

Single-Channel Measurement and Control Unit for Compact Gauges

TPG 261

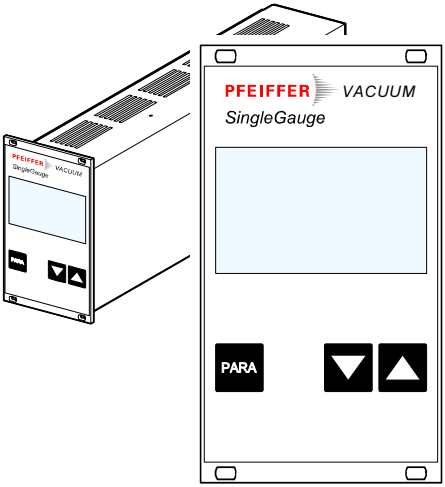

Product Identification

In all communications with Pfeiffer Vacuum, please specify the information on the product nameplate. For convenient reference copy that information into the space provided below.

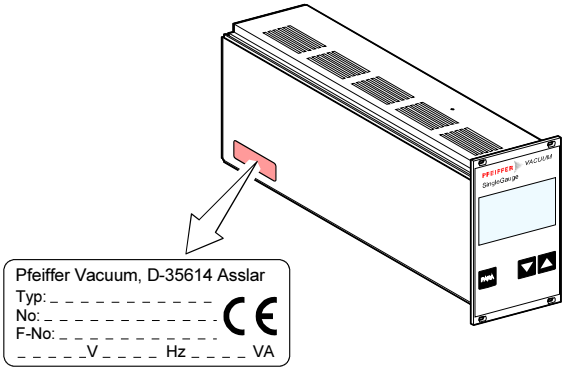

Validity

This document applies to products with part number PTG28030.

The part number (No.) can be taken from the product nameplate.

This manual is based on firmware version 302-510--.

If your unit does not work as described in this document, please check that it is equipped with the above firmware version (→ 🗎 58).

We reserve the right to make technical changes without prior notice.

All dimensions are indicated in mm.

Intended Use

The TPG 261 is used together with Pfeiffer Vacuum Compact Gauges (in this document referred to as gauges) for total pressure measurement. All products must be operated in accordance with their respective Operating Instructions.

Scope of Delivery

The scope of delivery consists of following parts:

1 TPG 261 Single-Channel Measurement and Control Unit
1 Power cord
1 Connector for *control* connection
4 Collar screws and plastic sleeves
2 Rubber feet
1 Rubber bar
1 Operating Instructions (this document)
1 Betriebsanleitung

Trademarks

SingleGauge™ Inficon AG
FullRange™ Inficon AG

Contents

Product Identification 2
Validity 2
Intended Use 3
Scope of Delivery 3
Trademarks 3

1 Safety 6
1.1 Symbols Used 6
1.2 Personnel Qualifications 7
1.3 General Safety Instructions 7
1.4 Liability and Warranty 8

2 Technical Data 9

3 Installation 14
3.1 Personnel 14
3.2 Installation, Setup 14
3.2.1 Rack Installation 14
3.2.2 Installation in a Control Panel 17
3.2.3 Use as Desk-Top Unit 18
3.3 Mains Power Connector 19
3.4 Gauge Connector *sensor* 20
3.5 *control* Connector 21
3.6 *relay* Connector 22
3.7 Interface Connector *RS232* 23

4 Operation 24
4.1 Front Panel 24
4.2 Turning the TPG 261 On and Off 25
4.3 Operating Modes 26
4.4 Measurement Mode 27
4.5 Parameter Mode 31
4.5.1 Switching Function Parameters 33
4.5.2 Gauge Parameters 38
4.5.3 Gauge Control 47
4.5.4 General Parameters 52
4.5.5 Test Parameters 56

5 Maintenance **65**

6 Troubleshooting **66**

7 Repair **68**

8 Storage **68**

9 Disposal **69**

Appendix **70**
A: Conversion Tables 70
B: Default Settings 71
C: Firmware Update 72
D: Literature 76
E: Index 78

Declaration of Conformity **80**

For cross-references within this document, the symbol (→ 🗎 XY) is used, for cross-references to further documents, listed under "Literature", the symbol (→ 🕮 [Z]).

1 Safety

1.1 Symbols Used

Symbols for residual risks

DANGER

Information on preventing any kind of physical injury.

WARNING

Information on preventing extensive equipment and environmental damage.

Caution

Information on correct handling or use. Disregard can lead to malfunctions or minor equipment damage.

Further symbols

The lamp/display is lit.

The lamp/display flashes.

The lamp/display is dark.

Press the key (example: PARA key).

Do not press any key.

1.2 Personnel Qualifications

Skilled personnel

All work described in this document may only be carried out by persons who have suitable technical training and the necessary experience or who have been instructed by the end-user of the product.

1.3 General Safety Instructions

Adhere to the applicable regulations and take the necessary precautions for all work you are going to do and consider the safety instructions in this document.

DANGER

Caution: mains voltage

Contact with live parts is extremely hazardous when any objects are introduced or any liquids penetrate into the unit.

Make sure no objects enter through the louvers and no liquids penetrate into the equipment.

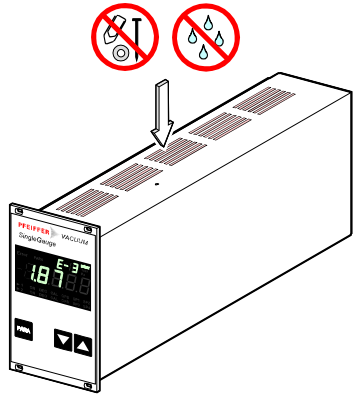

Communicate the safety instructions to all other users.

1.4 Liability and Warranty

Pfeiffer Vacuum assumes no liability and the warranty becomes null and void if the end-user or third parties

- disregard the information in this document
- use the product in a non-conforming manner
- make any kind of interventions (modifications, alterations etc.) on the product
- use the product with accessories not listed in the corresponding product documentation.

2 Technical Data

Mains specifications	Voltage	90 … 250 VAC
	Frequency	50 … 60 Hz
	Power consumption	≤45 W
	Overvoltage category	II
	Protection class	1
	Connection	European appliance connector IEC 320 C14 (→ 19)
Ambiance	Temperature	
	storage	–20 … +65 °C
	operation	+ 5 … +50 °C
	Relative humidity	≤80% up to +31 °C, decreasing to 50% at +40 °C
	Use	indoors only max. altitude 2000 m NN
	Pollution degree	II
	Protection type	IP30
Compatible gauges	Number	1
	Compatible Compact Gauges	
	Pirani	TPR 265, TPR 261
	Cold Cathode	IKR 251, IKR 261, IKR 270
	FullRange™ CC	PKR 251, PKR 261
	Process Ion	IMR 265
	FullRange™ BA	PBR 260
	Capacitance	CMR 261 … CMR 275
	Piezo	APR 250 … APR 267
Gauge connections	Number	1
	sensor connector	Amphenol C91B appliance connector, female, 6-pole (pin assignment → 20)

Gauge supply	Voltage	+24 VDC ±5%
	Current	750 mA
	Power	18 W
	Fuse protection	900 mA with PTC element, self-resetting after turning the TPG 261 off or disconnecting the gauge. The supply conforms to the requirements of a grounded protective extra low voltage (SELV-E according to EN 61010).
Operation	Front panel	via 3 keys
	Remote control	via RS232C interface
Measurement values	Measurement range	depending on gauge (→ 🕮 [2] … [12])
	Measurement error	
	gain error	≤0.01% F.S.
	offset error	≤0.01% F.S.
	Measurement rate	50 / s
	Display rate	10 / s
	Filter time constant	
	slow	1.2 s (f_g = 0.13 Hz)
	normal (nor)	400 ms (f_g = 0.4 Hz)
	fast	20 ms (f_g = 8 Hz)
	Measurement units	mbar, Pa, Torr
	Offset correction	for linear gauges –5 … 110% F.S.
	Calibration factor	for logarithmic gauges 0.10 … 9.99
		for linear gauges 0.500 … 2.000
	A/D converter	resolution 0.001% F.S.

Switching functions	Number	2
	Reaction delay	≤20 ms if switching threshold close to measurement value (for larger differences consider filter time constant)
	Adjustment range	depending on gauge (→ 📖 [2] … [12])
	Hysteresis	≥1% F.S. for linear gauges, ≥10% of measurement value for logarithmic gauges
Switching function relays	Contact type	floating changeover contact
	Load max.	30 VAC, 30 W (ohmic) 60 VDC, 1 A, 30 W (ohmic)
	Service life mechanic electric	 5×10^7 cycles 1×10^5 cycles (at max. load)
	Contact positions	→ 🗎 22
	Relay connector	D-Sub appliance connector, female, 15-pole (pin assignment → 🗎 22)
Error signal	Number	1
	Reaction time	≤20 ms
Error signal relay	Contact type	floating normally open contact
	Load max.	30 VAC, 30 W (ohmic) 60 VDC, 1 A, 30 W (ohmic)
	Service life mechanic electric	 5×10^7 cycles 1×10^5 cycles (at max. load)
	Contact positions	→ 🗎 21
	Control connector	Amphenol C91B appliance connector, female, 7-pole (pin assignment → 🗎 21)

Gauge control	Manual via keys activation/deactivation	HAnd (→ 🗎 28, 49, 50)
	External via *control* connector ON condition OFF condition	EtrA signal ≥ 2.0 V or input open signal ≤ 0.8 V
	Hotstart when mains power on	HoT (→ 🗎 49)
	Self control deactivation when pressure rises OFF threshold	SELF adjustable (→ 🗎 51)
	Control connector	Amphenol C91B appliance connector, female, 7-pole (pin assignment → 🗎 21)
Analog output	Number	1
	Voltage range	0 … 10 VDC
	Internal resistance	660 Ω
	Measuring signal vs. pressure	depending on gauge (→ 🕮 [2] … [12])
	Control connector	Amphenol C91B appliance connector, female, 7-pole (pin assignment → 🗎 21)
Interface	Standard	RS232C
	Protocol	ACK/NAK, ASCII with 3-character mnemonics, bi-directional data flow, 8 data bits, no parity bit, 1 stop bit
	RS232C	only TXD and RXD used
	Transmission rate	9600, 19200, 38400 baud
	RS232 connector	D-Sub appliance connector, male, 9-pole (pin assignment → 🗎 23)

Dimensions [mm]

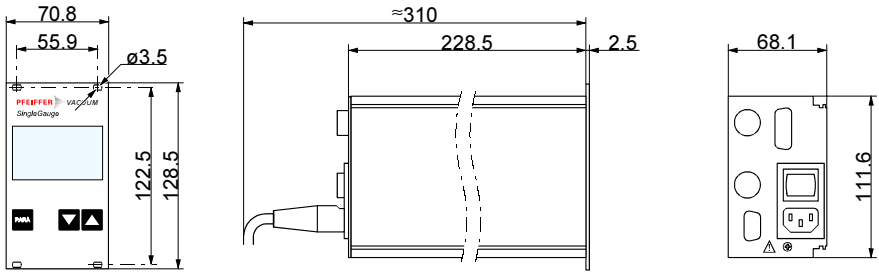

Use	For incorporation into a rack or control panel or as desk-top unit.
Weight	1.1 kg

3 Installation

3.1 Personnel

Skilled personnel

The unit may only be installed by persons who have suitable technical training and the necessary experience or who have been instructed by the end-user of the product.

3.2 Installation, Setup

The TPG 261 is suited for incorporation into a 19" rack or a control panel or for use as desk-top unit.

DANGER

Caution: damaged product

Putting a damaged product into operation can be extremely hazardous.

In case of visible damages, make sure the product is not put into operation.

3.2.1 Rack Installation

The TPG 261 is designed for installation into a 19" rack chassis adapter according to DIN 41 494. For this purpose, four collar screws and plastic sleeves are supplied with it.

DANGER

Caution: protection class of the rack

If the product is installed in a rack, it is likely to lower the protection class of the rack (protection against foreign bodies and water) e.g. according to the EN 60204-1 regulations for switching cabinets.

Take appropriate measures for the rack to meet the specifications of the protection class.

Guide rail

In order to reduce the mechanical strain on the front panel of the TPG 261, preferably equip the rack chassis adapter with a guide rail.

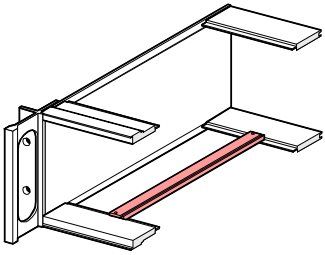

Slide rails

For safe and easy installation of heavy rack chassis adapters, preferably equip the rack frame with slide rails.

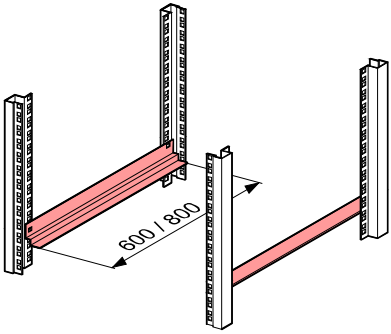

Height 3 U rack chassis adapter

❶ Secure the rack adapter in the rack frame.

The admissible maximum ambient temperature (→ 🗎 9) must not be exceeded neither the air circulation obstructed.

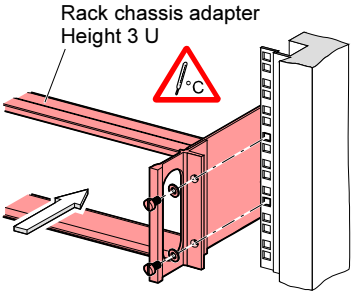

❷ Slide the TPG 261 into the rack chassis adapter …

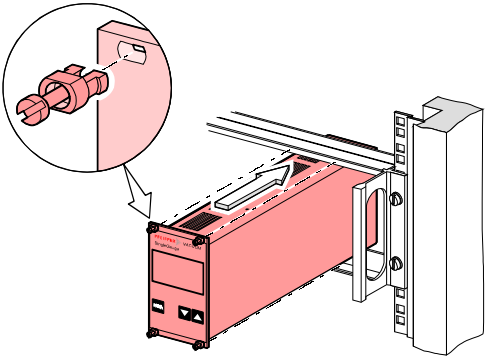

… and fasten the adapter panel to the rack chassis adapter using the screws supplied with the TPG 261.

3.2.2 Installation in a Control Panel

DANGER

Caution: protection class of the control panel

If the product is installed in a control panel, it is likely to lower the protection class of the control panel (protection against foreign bodies and water) e.g. according to the EN 60204-1 regulations for switching cabinets.

Take appropriate measures for the control panel to meet the specifications of the protection class.

For mounting the TPG 261 into a control panel, the following cut-out is required:

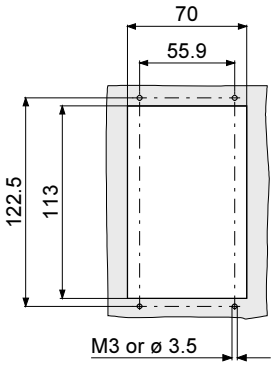

The admissible maximum ambient temperature (→ 9) must not be exceeded neither the air circulation obstructed.

For reducing the mechanical strain on the front panel, preferably support the unit.

❶ Slide the TPG 261 into the cut-out of the control panel …

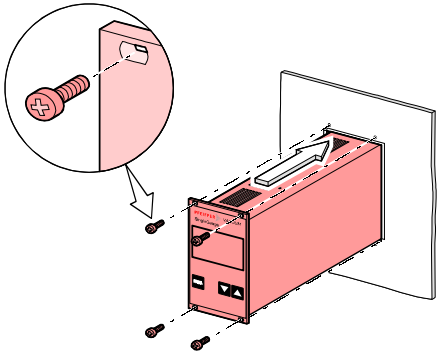

… and secure it with four M3 or equivalent screws.

3.2.3 Use as Desk-Top Unit

The TPG 261 is also suited for use as desk-top unit. For this purpose, two self-adhesive rubber feet as well as a slip-on rubber bar are supplied with it.

❶ Stick the two supplied rubber feet to the rear part of the bottom plate …

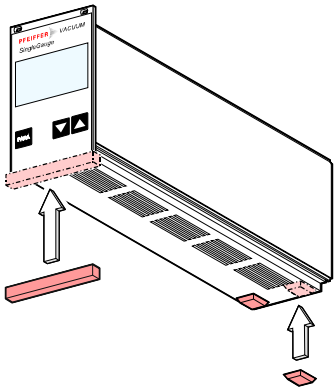

… and slip the supplied rubber bar onto the bottom edge of the front panel.

Select a location where the admissible maximum ambient temperature (→ 9) is not exceeded (e.g. due to sun irradiation).

3.3 Mains Power Connector

DANGER

Caution: line voltage

Incorrectly grounded products can be extremely hazardous in the event of a fault.

Use only a 3-conductor power cable with protective ground. The power connector may only be plugged into a socket with a protective ground. The protection must not be nullified by an extension cable without protective ground.

The unit is supplied with a power cord. If the mains connector is not compatible with your system, use your own, suitable cable with protective ground (3×1.5 mm^3).

The socket must be fuse-protected with 10 A_{max}

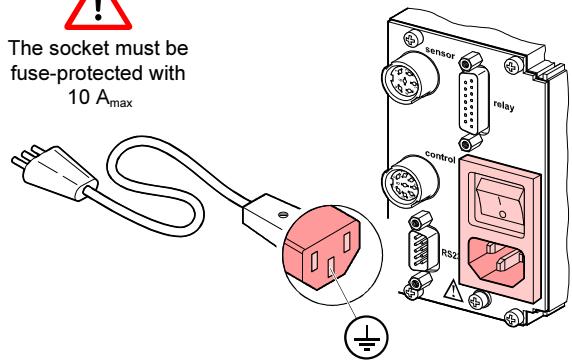

If the unit is installed in a switching cabinet, the mains voltage should be supplied and turned on via a central distributor.

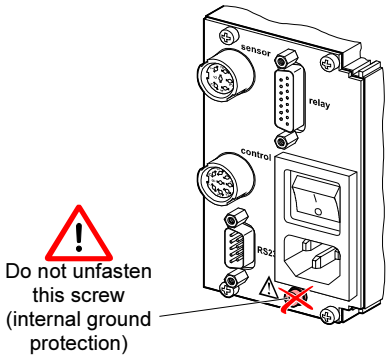

3.4 Gauge Connector *sensor*

Connect the gauge to the *sensor* connector via a sensor cable set available from us (→ sales literature) or your own, screened (electro-magnetic compatibility) sensor cable. Make sure the gauge you are connecting is compatible (→ 9).

Pin assignment *sensor*

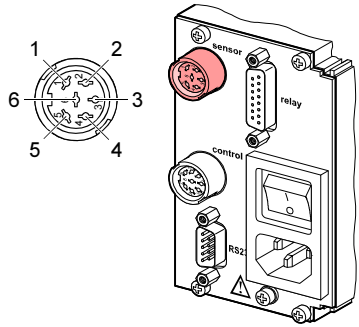

Pin assignment of the female 6-pole Amphenol C91B appliance connector:

Pin	Signal	
1	Identification	
6	Supply	+24 VDC
2	Supply common	GND
3	Signal input	(measuring signal+)
4	Signal common	(measuring signal–)
5	Screening	

3.5 *control* Connector

This connector allows to read the measuring signal, to evaluate the state of the floating contacts of the error relay, and to activate or deactivate the gauge (→ 47).

Connect the peripheral components to the *control* connector on the rear of the unit using your own, screened (electromagnetic compatibility) cable.

Pin assignment
Contact positions
control

Pin assignment of the female 7-pole Amphenol C91B appliance connector:

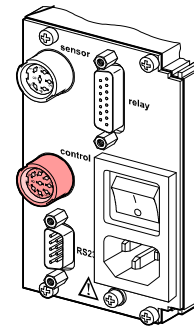

Pin	Signal
2	Analog output gauge 0 … 10 VDC
5	Screening GND
4	Gauge on signal ≥2.0 VDC or input open off signal ≤0.8 VDC
1, 6	Not assigned
3 7	No error / Error or power supply turned off

A suitable connector is supplied with the TPG 261.

3.6 *relay* Connector

This connector allows to use the floating switching contacts for an external control system.

Connect the peripheral components to the *relay* connector on the rear of the unit using your own, screened (electromagnetic compatibility) cable.

Pin assignment
Contact positions
relay

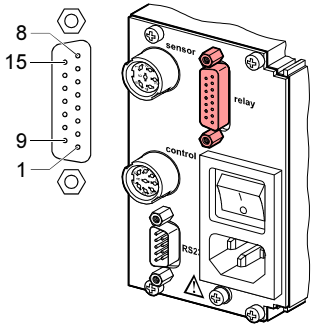

Pin assignment of the female 15-pole D-Sub appliance connector:

Pin	Signal			
	Switching function 1 **SP1**			
4 3 2		Pressure below threshold		Pressure above threshold or power supply turned off
	Switching function 2 **SP2**			
7 6 5		Pressure below threshold		Pressure above threshold or power supply turned off
9 … 14	Not connected			
	Supply for relays with higher switching power			
15 1 8	+24 VDC, 200 mA GND GND		Fuse-protected at 300 mA with PTC element, self-resetting after power off or pulling the *relay* connector. Meets the requirements of a grounded protective extra low voltage (SELV-E according to EN 61010).	

3.7 Interface Connector *RS232*

The RS232C interface allows for operating the TPG 261 via a HOST or terminal (→ 🕮 [1]). It can also be used for updating the firmware (→ 🗎 72).

☞ Connect the serial interface to the *RS232* connector on the rear of the unit using your own, screened (electromagnetic compatibility) cable.

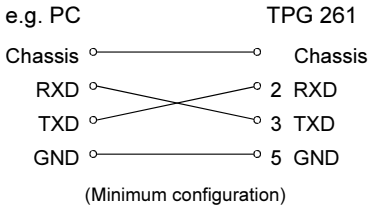

Pin assignment *RS232*

Pin assignment of the male 9-pole D-Sub appliance connector:

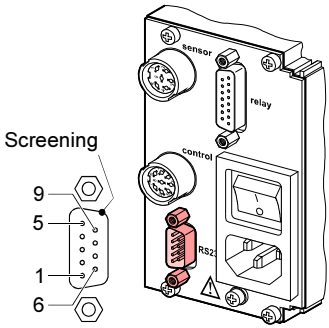

Pin	Signal
2	RXD
3	TXD
5	GND
4	DTR
7	RTS
8	CTS

Pin	Signal
1	not connected
6	not connected
9	not connected

Casing = screening

4 Operation

4.1 Front Panel

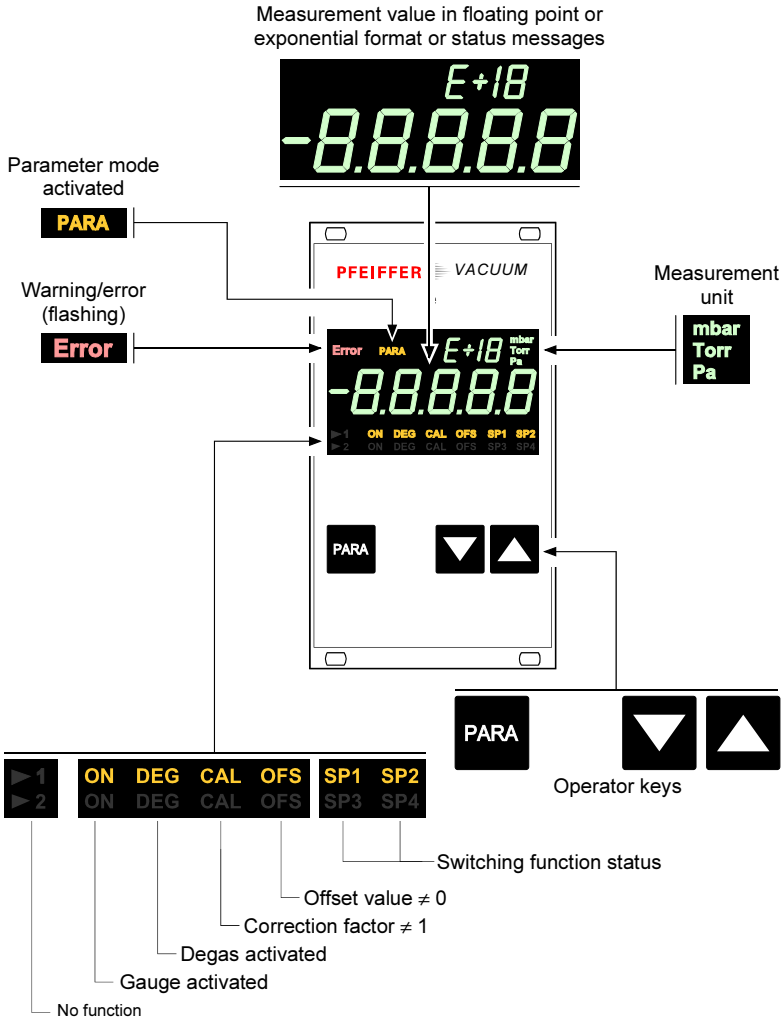

4.2 Turning the TPG 261 On and Off

Make sure the TPG 261 is correctly installed and the specifications in the Technical Data are met.

Turning the TPG 261 on

The power switch is on the rear of the unit.

Turn the TPG 261 on with the power switch (or centrally, via a switched power distributor, if the unit is incorporated in a rack).

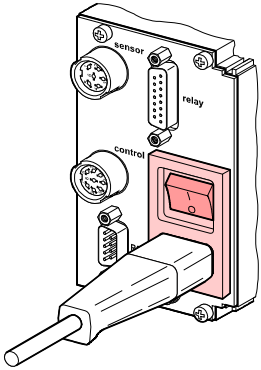

After power on, the TPG 261 …

- automatically performs a self-test
- identifies the connected gauge
- activates the parameters that were in effect before the last power off
- switches to the Measurement mode
- adapts the parameters if required (if another gauge was previously connected).

Turning the TPG 261 off

Turn the TPG 261 off with the power switch (or centrally, via a switched power distributor, if the unit is incorporated in a rack).

Wait at least 10 s before turning the TPG 261 on again in order for it to correctly initialize itself.

4.3 Operating Modes

The TPG 261 works in the following operating modes:

- Measurement mode
  for displaying measurement values or statuses
  (→ 27)
- Parameter mode
  for displaying or editing parameters (→ 31)
  - Switching function parameter group SP-P
    for entering or displaying thresholds (→ 33)
  - Gauge parameter group SEn-P
    for entering or displaying gauge parameters
    (→ 38)
  - Gauge control group CtL-P
    for entering or displaying gauge control parameters (→ 47)
  - General parameter group GEn-P
    for entering or displaying general parameters
    (→ 52)
  - Test program group tESt
    for running internal test programs (→ 56)
- Program transfer mode
  for updating the firmware (→ 72)

4.4 Measurement Mode

The Measurement mode is the standard operating mode of the TPG 261. Measurement values and statuses as well as the gauge identification are displayed in this mode.

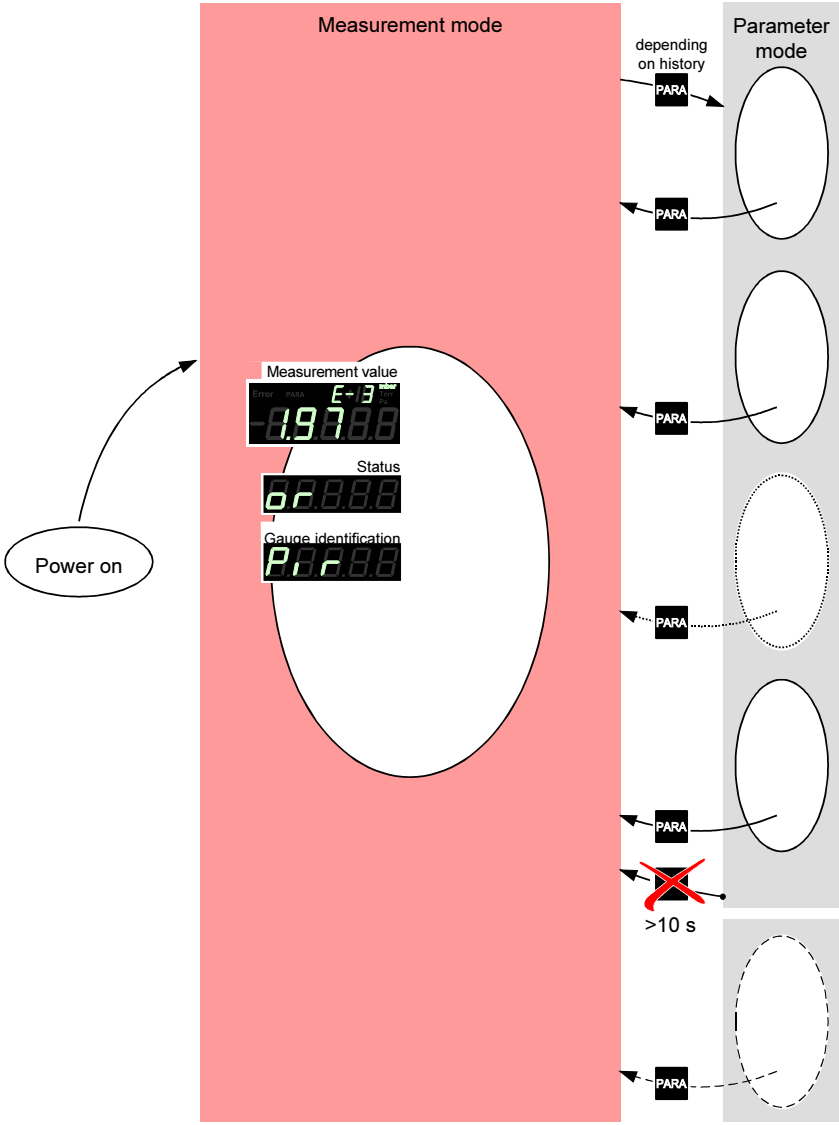

Turning the gauge on and off

Certain gauges can be turned on and off manually, if the gauge control is set to HAnd (→ 50).

Available for:

- ☐ Pirani Gauge (TPR)
- ☑ Cold Cathode Gauge (IKR)
- ☑ FullRange™ CC Gauge (PKR)
- ☑ Process Ion Gauge (IMR)
- ☑ FullRange™ BA Gauge (PBR)
- ☐ Capacitance Gauge (CMR)
- ☐ Piezo Gauge (APR)

ON

⇨ Press key >1 s: The gauge is turned off. oFF is displayed instead of the measurement value.

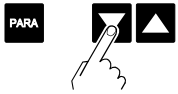

⇨ Press key >1 s: The gauge is turned on. A status message may be displayed instead of the measurement value.

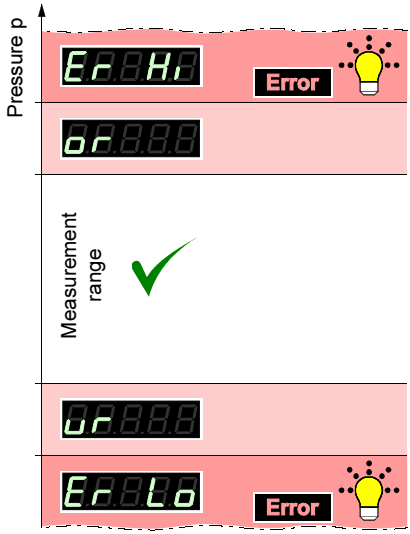
Pressure p
Error
Measurement range
Error

Displaying the gauge identification

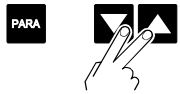

⇨ Press keys >0.5 s:
The type of the connected gauge is automatically identified and displayed for 4 s:

Pirani Gauge
(TPR 265, TPR 261)

Cold Cathode Gauge
(IKR 251, IKR 261)

Cold Cathode Gauge
(IKR 270)

FullRange™ CC Gauge
(PKR 251, PKR 261)

Process Ion Gauge
(IMR 265)

FullRange™ BA Gauge
(PBR 260)

Capacitance Gauge
(CMR 261 … CMR 275)

Piezo Gauge
(APR 250 … APR 267)

No gauge connected
(no SEnsor)

Connected gauge cannot be identified (no identifier)

Getting to the Parameter mode

→ 31

4.5 Parameter Mode

The Parameter mode is used for displaying, editing and entering parameter values as well as for testing the TPG 261. For ease of operation, the parameters are divided into groups.

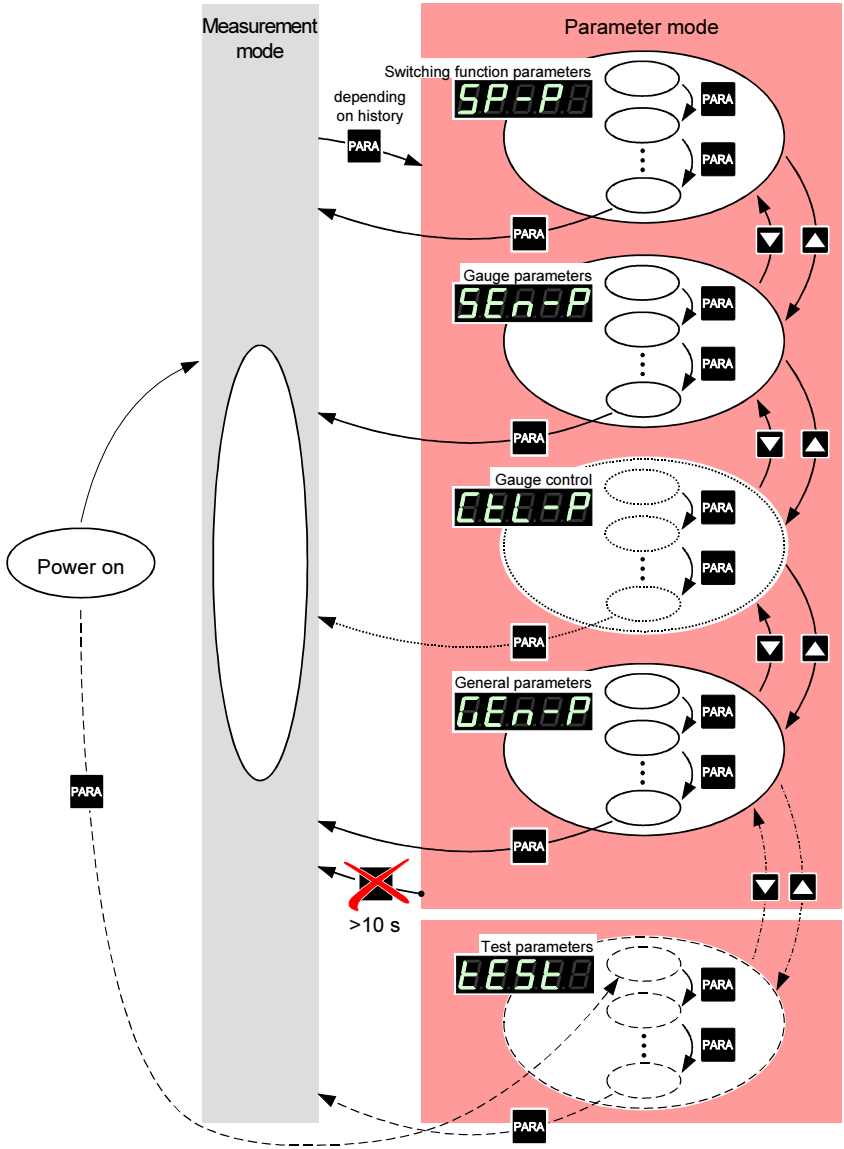

Selecting a parameter group

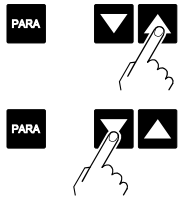

⇨ Switching function parameters → 🗎 33
Gauge parameters → 🗎 38
Gauge control → 🗎 47
General parameters → 🗎 52
Test parameters → 🗎 56

Selecting a parameter in a parameter group

Editing a parameter in a parameters group

Modifications of parameters come into effect immediately and are stored automatically. Exceptions are mentioned under the corresponding parameters.

4.5.1 Switching Function Parameters

The switching function parameter group (**set**point **p**arameters) is used for displaying, entering and editing threshold values of the two switching functions.

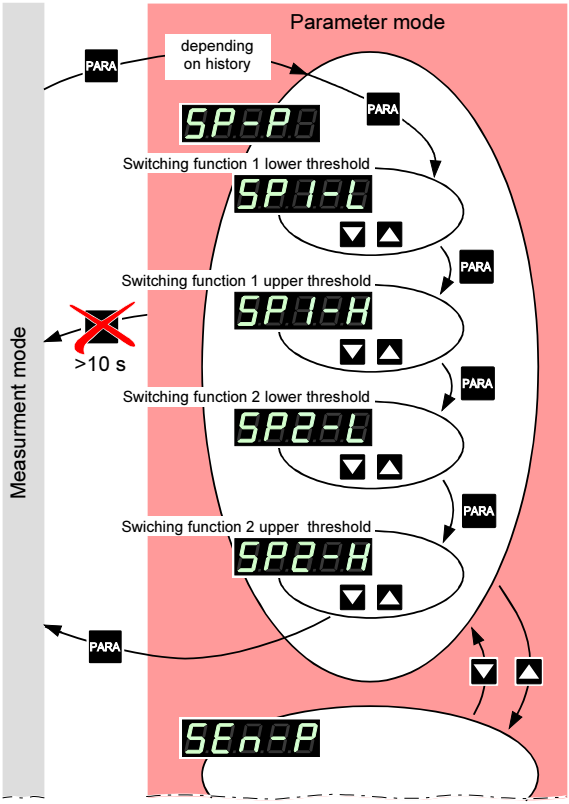

The TPG 261 has two switching functions with two adjustable thresholds each. The status of the switching function is displayed on the front panel (→ 24, 21) and can be evaluated via the floating contacts at the *relay* connector.

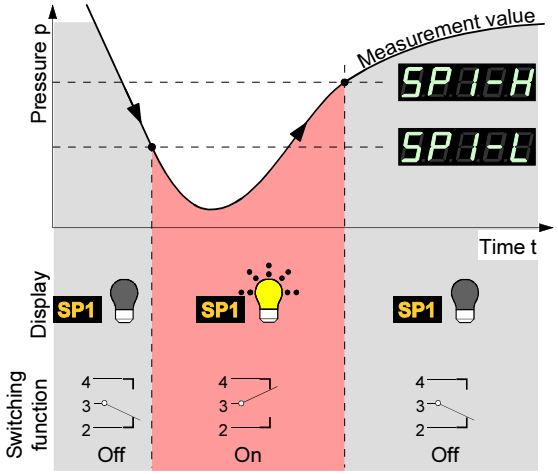

Selecting a parameter

⇨ The name of the parameter,

e.g.: SP1-L
Switching function 1
lower setpoint

is displayed as long as the key is pressed or at least for 1.5 s.

Afterwards, the currently valid threshold value is displayed.

Editing the threshold value

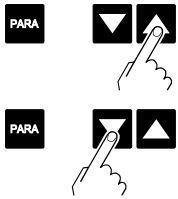

⇨ Press key <1 s:
The value is increased/ decreased by 1 increment.

Press key >1 s:
The value is increased/ decreased continuously.

Limits of the lower switching thresholds

	Value
	The lower switching threshold (Setpoint low) defines the pressure at which the switching function is activated when the pressure is dropping.
e.g.:	⇨ Gauge dependent (→ table). If another gauge type is connected, the TPG 261 automatically adjusts the switching threshold if required.

	lower threshold limit SP-L	upper threshold limit SP-L
	5×10^{-4}	1000
	1×10^{-9}	1×10^{-2}
	1×10^{-11}	1×10^{-2}
	1×10^{-9}	1000
	1×10^{-6}	1000
	5×10^{-10}	1000
	F.S. / 1000	F.S.

all values in mbar, CAL=1

The minimum hysteresis between the upper and lower switching threshold is at least 10% of the lower threshold or 1% of the set full scale value. If the value of the minimum hysteresis drops below these values, the upper threshold is automatically adjusted to a minimum hysteresis. This prevents unstable states.

Limits of the upper switching thresholds

	Value
SP.H.-H	The upper switching threshold (Setpoint high) defines the pressure at which the switching function is deactivated when the pressure is rising.
e.g.: 10.00	⇨ Gauge dependent (→ table). If another gauge type is connected, the TPG 261 automatically adjusts the threshold if required.

	lower threshold limit SP.H.-H	upper thershold limit SP.H.-H
Pir	+10% lower threshold	1000
PE9	+10% lower threshold	1×10^{-2}
PE11	+10% lower threshold	1×10^{-2}
Co9	+10% lower threshold	1000
Ion6	+10% lower threshold	1000
Ion12	+10% lower threshold	1000
Lin	+1% measurement range (F.S.)	F.S.

lower threshold

all values in mbar, CAL=1

The minimum hysteresis between the upper and lower switching threshold is at least 10% of the lower threshold or 1% of the set full scale value. This prevents unstable states.

4.5.2 Gauge Parameters

The Gauge parameter group (**sen**sor **p**arameters) is used for displaying, entering and editing parameters of the connected gauge.

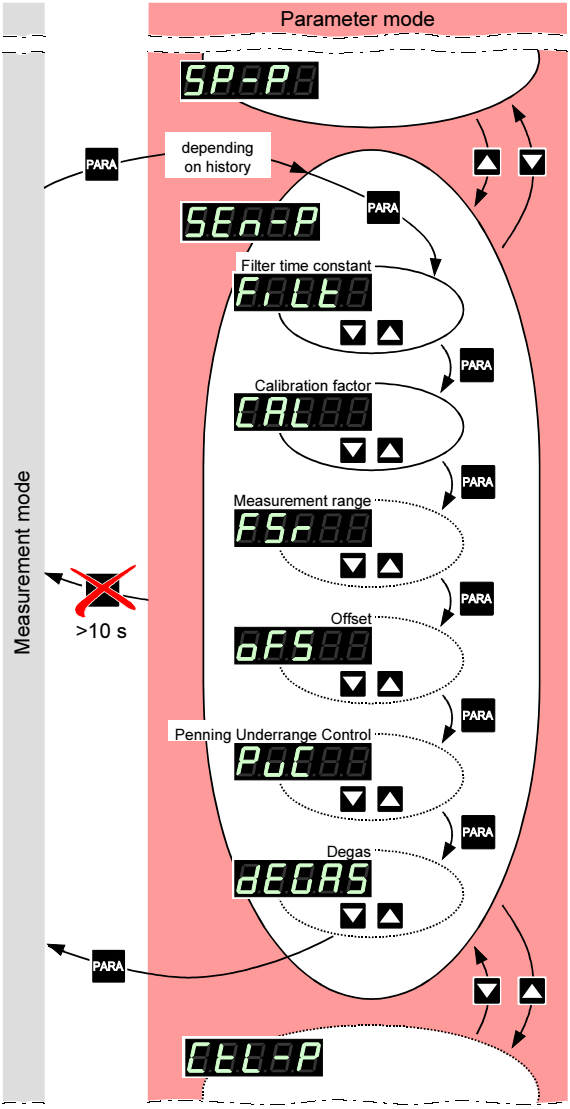

Selecting a parameter

⇨ The name of the parameter,

e.g.:

Filter time constant

is displayed as long as the key is pressed or at least for 1.5 s.

Afterwards, the currently valid parameter value is displayed.

Some parameters are not available for all gauges and thus not always displayed.

Available for	→ 🗎 39	41	42	43	44	46
	FILT	CAL	FS	oFS	PoC	dEGAS
Pir	✓	✓	–	–	–	–
PE9	✓	✓	–	–	✓	–
PE11	✓	✓	–	–	✓	–
Co9	✓	✓	–	–	–	–
Ion6	✓	✓*)	–	–	–	–
Ion12	✓	✓*)	–	–	–	✓
Lin	✓	✓	✓	✓	–	–

*) depending on pressure

Measurement value filter

The measurement value filter permits a better evaluation of unstable or disturbed measuring signals.

☞ The measurement value filter does not affect the analog output (→ 🗎 21).

	Value
FILtE	
FASt	⇨ Fast: The TPG 261 responds quickly to fluctuations of the measurement value. As a result, it will respond faster to interference in measured values. 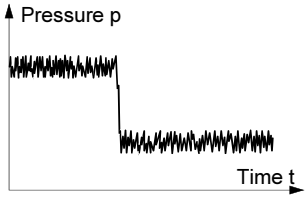
nor	⇨ Normal: Good relationship between response and sensitivity of the display and the switching functions to changes in the measured values. 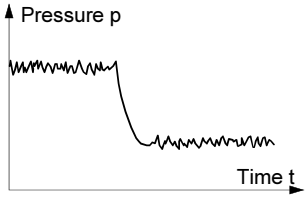
SLo	⇨ Slow: The TPG 261 does not respond to small changes in measured values. As a result, it will respond more slowly to changes in the measured values. 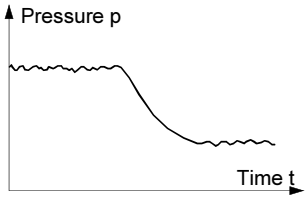

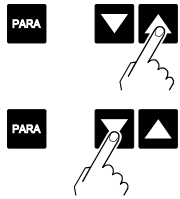

⇨ The value is increased/ decreased by the defined increments.

Calibration factor

The calibration factor allows the measured value to be calibrated for other gases than N_2 (→ characteristic curves in 🕮 [2 … 10]).

Available for:

- ☑ Pirani Gauge (TPR)
- ☑ Cold Cathode Gauge (IKR)
- ☑ FullRange™ CC Gauge (PKR)
- ☑ Process Ion Gauge *) (IMR)
- ☑ FullRange™ BA Gauge **) (PBR)
- ☑ Capacitance Gauge (CMR)
- ☑ Piezo Gauge (APR)

*) only for pressures <1×10^{-2} mbar.
**) only for pressures <1×10^{-1} mbar.

	Value
	CAL
e.g.:	⇨ No correction
e.g.:	⇨ Measurement value corrected by a factor of 0.10 … 9.99 (logarithmic gauges). Measurement value corrected by a factor of 0.500 … 2.000 (linear gauges).

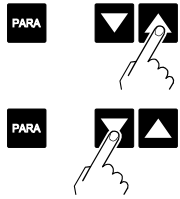

⇨ Press key <1 s:
The value is increased/ decreased by 1 increment.

Press key >1 s:
The value is increased/ decreased continuously.

Measurement range (F.S.) of linear gauges

For linear gauges, the full scale (F.S.) value has to be defined according to the connected gauge type. For logarithmic gauges it is automatically recognized.

Available for:

- ☐ Pirani Gauge (TPR)
- ☐ Cold Cathode Gauge (IKR)
- ☐ FullRange™ CC Gauge (PKR)
- ☐ Process Ion Gauge (IMR)
- ☐ FullRange™ BA Gauge (PBR)
- ☑ Capacitance Gauge (CMR)
- ☑ Piezo Gauge (APR)

	Value
e.g.:	⇨ 0.01 mbar 0.1 mbar 1 mbar 10 mbar 100 mbar 1000 mbar 2 bar 5 bar 10 bar 50 bar Conversion table → Appendix 🗎 70

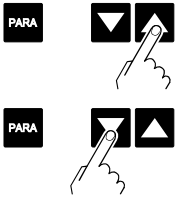

⇨ The value is increased/ decreased by the defined increments.

Offset correction

The offset value is displayed and readjusted according to the actual measurement value (in the range of -5 … +110% of the set full scale value).

Available for:

- ☐ Pirani Gauge (TPR)
- ☐ Cold Cathode Gauge (IKR)
- ☐ FullRange™ CC Gauge (PKR)
- ☐ Process Ion Gauge (IMR)
- ☐ FullRange™ BA Gauge (PBR)
- ☑ Capacitance Gauge (CMR)
- ☑ Piezo Gauge (APR)

The offset correction affects:

- ☑ the displayed measurement value
- ☐ the displayed threshold value of the switching functions
- ☐ the analog output at the *control* connector (→ 🗎 21)

	Value	
		OFS
	⇨ Offset correction deactivated	
e.g.:	⇨ Offset correction activated	

⇨ Press key >1.5 s:
The offset value is readjusted. The actual measurement value is accepted as new offset value.

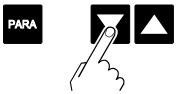

⇨ Reset the offset value.

When the offset correction is activated, the saved offset value is subtracted from the actual measurement value. This allows measuring relative to a reference pressure.

When the zero of the gauge is readjusted, the offset correction must be deactivated.

Underrange control

Behavior in the event of an underrange with Cold Cathode Gauges (Penning underrange control).

Available for:

- ☐ Pirani Gauge (TPR)
- ☑ Cold Cathode Gauge (IKR)
- ☐ FullRange™ CC Gauge (PKR)
- ☐ Process Ion Gauge (IMR)
- ☐ FullRange™ BA Gauge (PBR)
- ☐ Capacitance Gauge (CMR)
- ☐ Piezo Gauge (APR)

There is a number of possible causes of an underrange:

- the pressure in the vacuum system is lower than the measurement range
- the measurement element has not ignited (yet)
- the discharge has failed
- a defect has occurred

Caution

Caution: relay is switching

An underrange can lead to unintended reactions of the connected control system.

Prevent false control signals and messages by disconnecting the sensor and control cables.

	Value
PuC	
oFF	⇨ Underrange state is interpreted as admissible measurement value. ur is displayed. The switching function remains ON.
on	⇨ Underrange state is interpreted as inadmissible measurement value. ur is displayed. The switching function changes to OFF.

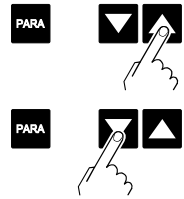

⇨ Activate/deactivate the underrange control.

If chances are that the pressure in the vacuum system drops below the measurement range of the gauge, it is advisable to select oFF.

If on is selected, the evaluation of the switching function is suppressed for approx. 10 seconds when the gauge is turned on and each time after an underrange has occurred. During this time, the switching function remains OFF.

Degas

Contamination deposits on the electrode system of hot cathode gauges may cause instabilities of the measurement values. The Degas function allows to clean the electrode system.

Available for:

- ☐ Pirani Gauge (TPR)
- ☐ Cold Cathode Gauge (IKR)
- ☐ FullRange™ CC Gauge (PKR)
- ☐ Process Ion Gauge (IMR)
- ☑ FullRange™ BA Gauge (PBR)
- ☐ Capacitance Gauge (CMR)
- ☐ Piezo Gauge (APR)

	Value
dEGAS	DEG
oFF	⇨ Normal operation.
on	⇨ Degas: The electron collection grid is heated to ≈700 °C by electron bombardment and the electrode system is thus cleaned.

⇨ Start degas.
Duration of the Degas function 3 min. (can be aborted).

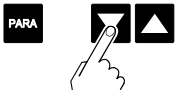

⇨ Abort degas.

4.5.3 Gauge Control

The Gauge control group (**c**ontrol **p**arameters) is used for displaying, entering and editing parameters which define the activation/ deactivation of the connected gauge.

If the connected gauge cannot be controlled (→ 49), this group is not available.

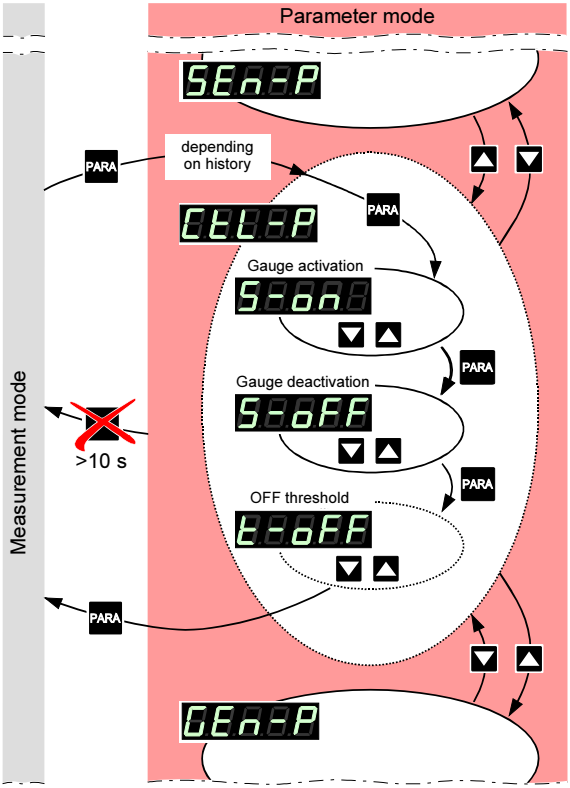

Selecting a parameter

⇨ The name of the parameter,

e.g.:

Gauge activation

is displayed as long as the key is pressed or at least for 1.5 s.

Afterwards, the currently valid parameter value is displayed.

Some parameters are not available for all gauges and thus not always displayed.

Available for	→ 📄 49 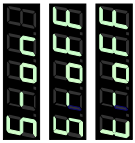	50	51
	–	–	–
	✓	✓	✓
	✓	✓	✓
	✓	✓	–
	✓	✓	–
	✓	✓	–
	–	–	–

Gauge activation

Certain gauges can be activated by different means.

The following gauges can be controlled:

- ☐ Pirani Gauge (TPR)
- ☑ Cold Cathode Gauge (IKR)
- ☑ FullRange™ CC Gauge (PKR)
- ☑ Process Ion Gauge (IMR)
- ☑ FullRange™ BA Gauge (PBR)
- ☐ Capacitance Gauge (CMR)
- ☐ Piezo Gauge (APR)

	Value
S-on	
HAnd	⇨ Manual activation: The gauge can be activated by pressing the ▲ key.
Etrn	⇨ External activation: The gauge is activated by an input signal fed via the *control* connector (→ 🗎 21).
HoE	⇨ Hotstart: The gauge is automatically activated when the TPG 261 is turned on. Measurement is thus automatically resumed after a power failure. Gauge deactivation → 🗎 50.

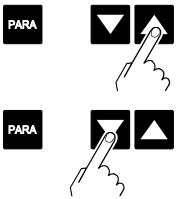

⇨ Increase/decrease the value by the defined increments.

Gauge deactivation

Certain gauges can be deactivated by different means.

The following gauges can be controlled:

- ☐ Pirani Gauge (TPR)
- ☑ Cold Cathode Gauge (IKR)
- ☑ FullRange™ CC Gauge *) (PKRx)
- ☑ Process Ion Gauge *) (IMR)
- ☑ FullRange™ BA Gauge *) (PBR)
- ☐ Capacitance Gauge (CMRx)
- ☐ Piezo Gauge (APR)

*) except for self control

	Value
S-oFF	
HAnd	⇨ Manual deactivation: The gauge is deactivated by pressing the ▼ key.
EtrnA	⇨ External deactivation: The gauge is deactivated by an input signal fed via the *control* connector (→ 🗎 21).
Additionally for Cold Cathode Gauge:	
SELF	⇨ Self control: The gauge deactivates itself when the pressure rises (→ 🗎 51).

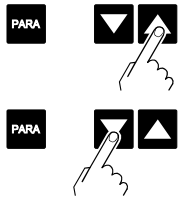

⇨ Increase/decrease the value by the defined increments.

OFF threshold

Definition of the OFF threshold for the gauge to be de-activated by itself (self control).

Available for:

- ☐ Pirani Gauge (TPR)
- ☑ Cold Cathode Gauge (IKRx)
- ☐ FullRange™ CC Gauge (PKR)
- ☐ Process Ion Gauge (IMR)
- ☐ FullRange™ BA Gauge (PBR)
- ☐ Capacitance Gauge (CMR)
- ☐ Piezo Gauge (APR)

	Adjustment range
e.g.:	→ table below

	TPR	PKR IMR PBR	CMR, APR F.S.=1
IKR	10^{-3}…10^{-2}	10^{-5}…10^{-2}	10^{-3}…10^{-2}

all values in mbar, CAL=1

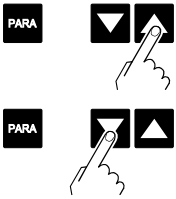

⇨ Press key <1 s:
The value is increased/ decreased by 1 increment.

Press key >1 s:
The value is increased/ decreased continuously.

4.5.4 General Parameters

The General parameter group (**gen**eral **p**arameters) is used for displaying, entering and editing generally applicable system parameters.

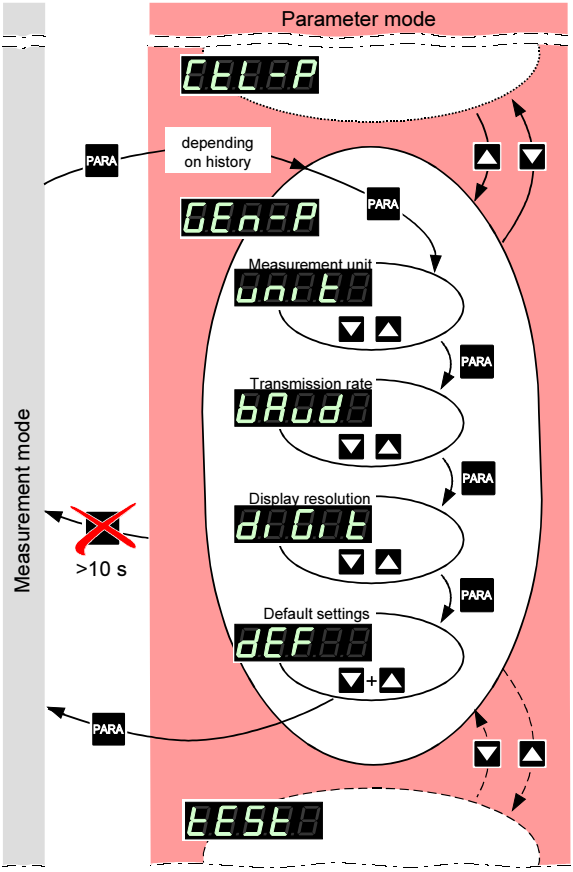

Selecting a parameter

⇨ The name of the parameter

e.g.:

Measurement unit

is displayed as long as the key is pressed or at least for 1.5 s.

Afterwards, the currently valid parameter value is displayed.

The parameters are available for all gauge types and thus always displayed.

	→ 54	54	55	55
Available for all gauges	✓	✓	✓	✓

Editing a parameter

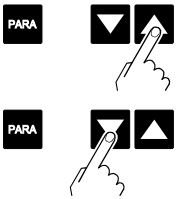

⇨ Increase/decrease the value by the defined increments.

Measurement unit

Unit of measured values, thresholds etc. See Appendix (→ 🗎 70) for conversion.

	Value	
unit		
bAr	⇨ mbar/bar	mbar Torr Pa
torr	⇨ Torr (only available if Torr lock is not activated i.e. Torr is not suppressed → 🗎 59)	mbar Torr Pa
PASC	⇨ Pascal	mbar Torr Pa

Transmission rate

Transmission rate of the RS232C interface.

	Value
bAud	
e.g.: 9600	⇨ 9600 baud 19200 baud 38400 baud

Display resolution

Display resolution of measured values.

	Value
	⇨ Display • rounded to one decimal digit • or two integrals
	⇨ Display • rounded to two decimal digits • or three integrals

Default settings

All user parameter settings are replaced by the factory settings.

Loading of the default parameter settings is irreversible.

	Value
	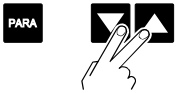
	⇨ The default values are loaded (→ 🗎 71).

4.5.5 Test Parameters

The Test parameter group is used for displaying the firmware version, entering and editing special parameter values, and for running test programs.

This group is only available if the PARA key was pressed while the TPG 261 was turned on.

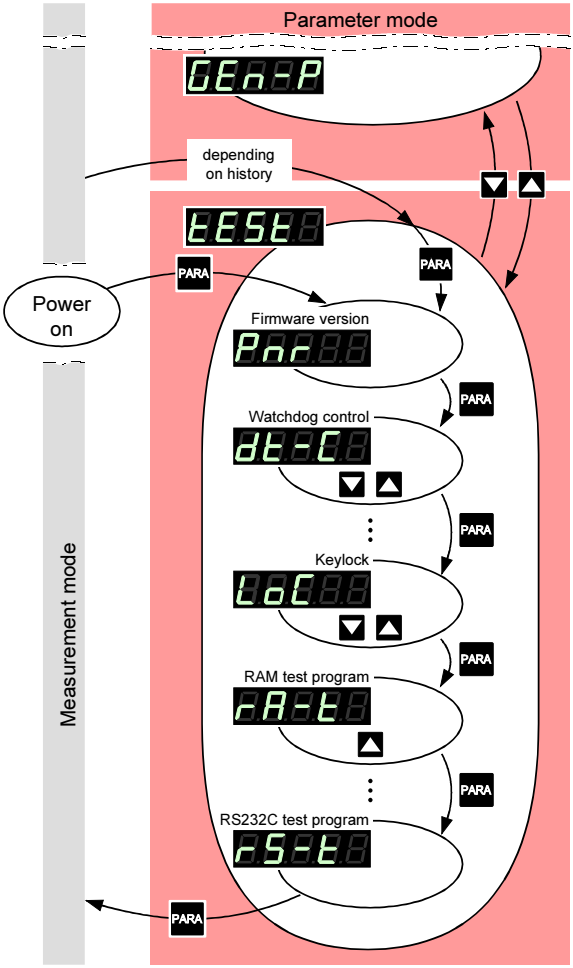

Selecting a parameter

⇨ The name of the parameter

e.g.:

Firmware version

is displayed.

The parameters are available for all gauge types and thus always displayed.

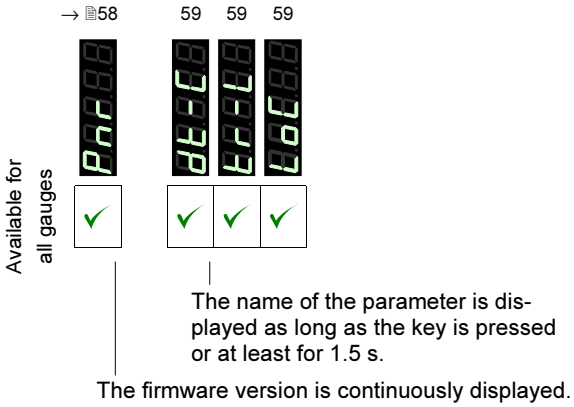

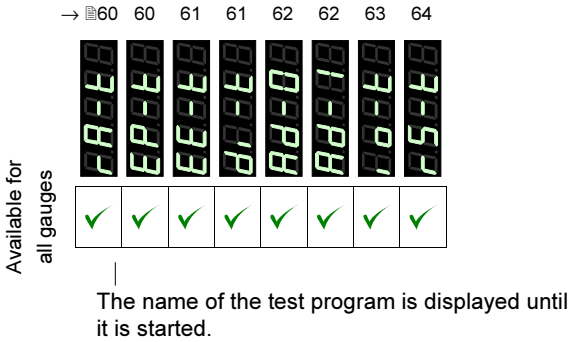

Editing a parameter

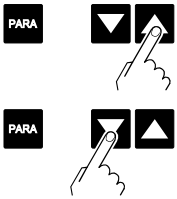

⇨ Increase/decrease the value by the defined increments.

Starting the test program

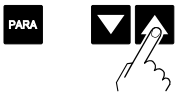

⇨ Start test program.

Firmware version

The firmware version (program version) is displayed.

	Version
	⇨ The two parts of the firmware number are displayed alternately.

The last character indicates the modification index (-, A … Z). Please mention this index when contacting Pfeiffer Vacuum in the event of a problem.

Watchdog control

Behavior of the system control (watchdog) in the event of an error.

	Setting
dt-C	
Auto	⇨ The system automatically acknowledges error messages of the watchdog after 2 s.
oFF	⇨ Error messages of the watchdog have to be acknowledged by the operator.

Torr lock

The measurement unit Torr can be suppressed in the corresponding parameter setting unit (→ 54).

	Setting
tr-L	
oFF	⇨ Measurement unit Torr available.
on	⇨ Measurement unit Torr not available.

Keylock

The entry lock function prevents inadvertent entries in the Parameter mode and thus malfunctions.

	Setting
LoC	
oFF	⇨ Entry lock function disabled.
on	⇨ Entry lock function enabled. LoC is displayed when the user attempts to edit a setting in the Parameter mode.

RAM test

Test of the main memory.

	Test sequence
rA-t	The test runs automatically one time:
run	⇨ Test in process (very briefly).
PASS	⇨ Test finished, no error found.
Err	⇨ Test finished, error(s) found. The **Error** lamp flashes. If the error message persists after several test sequences have been run, please contact your local Pfeiffer Vacuum service center.

EPROM test

Test of the program memory.

	Test sequence
EP-t	The test runs automatically one time:
run	⇨ Test in process
PASS	⇨ Test finished, no error found. After the test, a four-digit checksum (hexadecimal format) is displayed.
Err	⇨ Test finished, error(s) found. After the test, a four-digit checksum (hexadecimal format) is displayed. The **Error** lamp flashes. If the error message persists after several test sequences have been run, please contact your local Pfeiffer Vacuum service center.

EEPROM test

Test of the parameter memory.

	Test sequence
EE-tt	The test runs automatically one time:
run	⇨ Test in process (very briefly).
PASS	⇨ Test finished, no error found.
Err	⇨ Test finished, error(s) found. The **Error** lamp flashes. If the error message persists after several test sequences have been run, please contact your local Pfeiffer Vacuum service center.

Display test

Test of the display.

	Test sequence
di-tt	The test runs automatically one time*):
Error PARA E+18 mbar Torr Pa -8.8.8.8.8 ►1 ON DEG CAL OFS SP1 SP2 ►2 ON DEG CAL OFS SP3 SP4	⇨ First, all display elements are lit at the same time, ...
Error PARA E+18 mbar Torr Pa 0.0.0.0.0 : 0.0.0.0.0 ►1 ON DEG CAL OFS SP1 SP2 ►2 ON DEG CAL OFS SP3 SP4	⇨ ... and then, each element is lit individually.

*) PARA ▼ ▲ ⇨ Stop the test sequence and activate one element after another by pressing the key once per element.

A/D converter test 0

Test of channel 0 of the analog/digital converter (with a reference voltage at the signal input of the *sensor* connector (→ 🗎 20)).

☞ If the signal input is open, the TPG 261 displays a default value that may easily fluctuate because of the high sensitivity of the open measurement circuit.

	Test sequence
Ad-0	
e.g.: 7.3055	⇨ Measuring signal in Volt.

A/D converter test 1

Test of channel 1 of the analog/digital converter (with a reference voltage at the signal input of the *sensor* connector (→ 🗎 20)).

☞ If the signal input is open, the TPG 261 displays a default value that may easily fluctuate because of the high sensitivity of the open measurement circuit.

	Test sequence
Ad-1	
e.g.: 1.8170	⇨ Gauge identification voltage.
5.0000	⇨ No gauge connected.

I/O test

Test of the relays of the TPG 261. The program tests their switching function.

> **Caution**
>
> Caution: The relays switch irrespective of the pressure
>
> Starting a test program may cause unwanted effects in connected control systems.
>
> Disconnect all sensor and control system lines to ensure that no control commands or messages are triggered by mistake.

The relays switch on and off cyclically. The switching operations are indicated optically and can be heard.

The contacts of the switching functions 1 … 4 are connected to the *relay* connector (→ 22), the contacts of the error relay to the *control* connector (→ 21) on the rear of the housing. Check their function with an ohmmeter.

	Test sequence
	The test runs automatically one time:
	⇨ All relays deactivated
	⇨ Switching function relay 1
	⇨ Switching function relay 2
:	⇨ No function

r.4-H	⇨ No function
r.4-L	
r.5-H	⇨ Gauge relay
r.5-L	
r.6-H	⇨ No function
r.6-L	
r.7-H	⇨ Error relay
r.7-L	

RS232C test

Test of the RS232C interface. The TPG 261 repeats each sign transmitted by the communicating HOST.

☞ The data transferred from/to the TPG 261 can be displayed by the computer only (→ 🕮 [1]).

	Test sequence
r.S-t	The test runs automatically.

5 Maintenance

The product requires no maintenance.

Cleaning the TPG 261

For cleaning the outside of the TPG 261, a slightly moist cloth will usually do. Do not use any aggressive or scouring cleaning agents.

DANGER

Caution: mains voltage

Contact with live parts is extremely hazardous when liquids penetrate into the unit.

Make sure no liquids penetrate into the equipment.

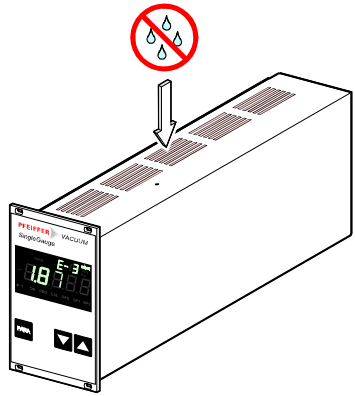

6 Troubleshooting

Signalization of errors

Error and the error relay opens (→ 21).

Error messages

	Possible cause and remedy/ acknowledgement
SE	Interruption or instability in sensor line or connector (Sensor error). ⇨ Acknowledge with the PARA. key If the problem persists, noSEn or noidP is displayed.

	Possible cause and remedy/ acknowledgement
dt	The TPG 261 has been turned on too fast after power off. ⇨ Acknowledge with the PARA key. If the watchdog is set to AuEo, the TPG 261 acknowledges the message automatically after 2 s (→ 59).
	The watchdog has tripped because of a severe electric disturbance or an operating system error. ⇨ Acknowledge with the PARA key. If the watchdog is set to AuEo, the TPG 261 acknowledges the message automatically after 2 s (→ 59).

	Possible cause and remedy/ acknowledgement
rA	Main memory (RAM) error. ⇨ Acknowledge with the PARA key.

	Possible cause and remedy/ acknowledgement
EP.0.0.0	Program memory (EPROM) error. ⇨ Acknowledge with the PARA key.

	Possible cause and remedy/ acknowledgement
EE.0.0.0	Parameter memory (EEPROM) error. ⇨ Acknowledge with the PARA key.

	Possible cause and remedy/ acknowledgement
di.0.0.0	Display driver error. ⇨ Acknowledge with the PARA key.

	Possible cause and remedy/ acknowledgement
Ad.0.0.0	A/D converter error. ⇨ Acknowledge with the PARA key.

	Possible cause and remedy/ acknowledgement
tF.0.0.0	Operating system (Task Fail) error. ⇨ Acknowledge with the PARA key.

Technical support

If the problem persists after the message has been acknowledged for several times and/or the gauge has been exchanged, please contact you local Pfeiffer Vacuum service center.

7 Repair

Return defective products to your nearest Pfeiffer Vacuum service center for repair.

Pfeiffer Vacuum assumes no liability and the warranty becomes null and void if repair work is carried out by the end-user or third parties.

8 Storage

Caution

Caution: electronic component

Inappropriate storage (static electricity, humidity etc.) can damage electronic components.

Store the product in an antistatic bag or container. Observe the corresponding specifications in the technical data (→ 9).

9 Disposal

WARNING

Caution: substances detrimental to the environment

Products or parts thereof (mechanical and electric components, operating fluids etc.) can be detrimental to the environment.

Dispose of such substances in accordance with the relevant local regulations.

Separating the components

After disassembling the product, separate its components according to the following criteria:

Non-electronic components

Such components must be separated according to their materials and recycled.

Electronic components

Such components must be separated according to their materials and recycled.

Appendix

A: Conversion Tables

Weights

	kg	lb	slug	oz
kg	1	2.205	68.522×10^{-3}	35.274
lb	0.454	1	31.081×10^{-3}	16
slug	14.594	32.174	1	514.785
oz	28.349×10^{-3}	62.5×10^{-3}	1.943×10^{-3}	1

Pressures

	N/m², Pa	bar	mbar	Torr	at
N/m², Pa	1	10×10^{-6}	10×10^{-3}	7.5×10^{-3}	9.869×10^{-6}
bar	100×10^{3}	1	10^{3}	750.062	0.987
mbar	100	10^{-3}	1	750.062×10^{-3}	0.987×10^{-3}
Torr	133.322	1.333×10^{-3}	1.333	1	1.316×10^{-3}
at	101.325×10^{3}	1.013	1.013×10^{3}	760	1

Pressure units used in the vacuum technology

	mbar	Pascal	Torr	mmWs	psi
mbar	1	100	750.062×10^{-3}	10.2	14.504×10^{-3}
Pascal	10×10^{-3}	1	7.5×10^{-3}	0.102	0.145×10^{-3}
Torr	1.333	133.322	1	13.595	19.337×10^{-3}
mmWs	9.81×10^{-2}	9.81	7.356×10^{-2}	1	1.422×10^{-3}
psi	68.948	6.895×10^{3}	51.715	703	1

Linear measures

	mm	m	inch	ft
mm	1	10^{-3}	39.37×10^{-3}	3.281×10^{-3}
m	10^{3}	1	39.37	3.281
inch	25.4	25.4×10^{-3}	1	8.333×10^{-2}
ft	304.8	0.305	12	1

Temperature

	Kelvin	Celsius	Fahrenheit
Kelvin	1	°C+273.15	(°F+459.67)×5/9
Celsius	K-273.15	1	5/9×°F-17.778
Fahrenheit	9/5×K-459.67	9/5×(°C+17.778)	1

B: Default Settings

The following values are activated when the default settings are loaded (→ 🗎 55):

	Default	User	
SP.1-L	1×10^{-11} mbar		
SP.1-H	9×10^{-11} mbar		
FiLt	normal		
Cor	1.00 (log) 1.000 (lin)		
FS	1000 mbar		
oFS	off 0×10^{-2} mbar		
PuC	off		
unit	mbar		
bAud	9600		
diGit	2 Digit		
diSP	Hand		
dt-C	Auto		
tr-L	off		
LoC	off		

C: Firmware Update

If your TPG 261 firmware needs updating, e.g. for implementing a new gauge type, please contact your local Pfeiffer Vacuum service center.

User parameters

Most of the settings you may have defined in the Parameter and Test mode will not be affected by a firmware update. To be sure, note your parameter settings before upgrading the firmware (→ 71).

Preparing the TPG 261 for a program transfer

1. Turn the TPG 261 off.

2. Connect the TPG 261 with the serial COM1 (COM2) interface of your PC via a 9-pole D-Sub extension cable (the firmware of the TPG 261 cannot be loaded from a Mac).

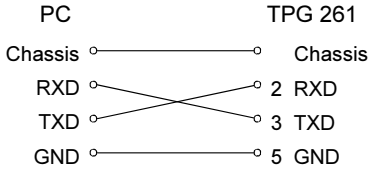

❸ With a pin (ø<2 mm), depress the switch on the top of the unit, under the housing, and turn the TPG 261 on.

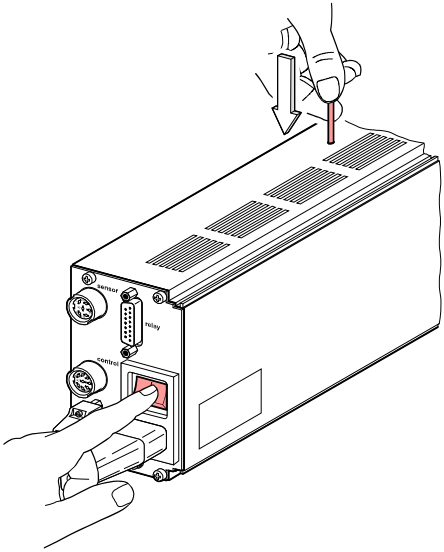

After power on, the display remains dark.

Program transfer

In the following instructions, the index -n is used instead of the actual index.

❶ Unpack the self extracting file SingleDualGauge 302-510-n.exe.

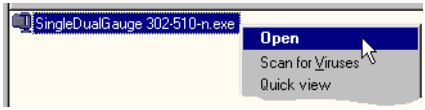

❷ If you have not connected the TPG 261 to the COM1 interface:

- Open the batch file Update 302-510-n.bat …

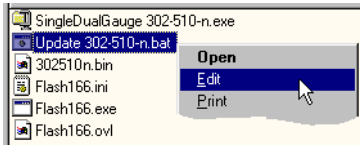

- … edit the interface …

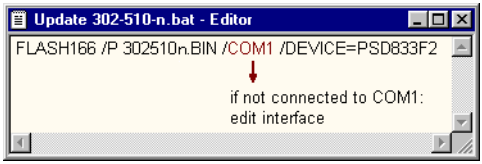

- … and save the new setting.

❸ Start batch file Update 302-510-n.bat .

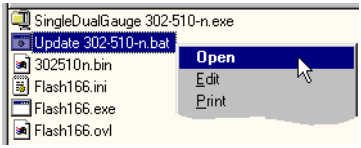

⇨ The new firmware is transmitted to the TPG 261.

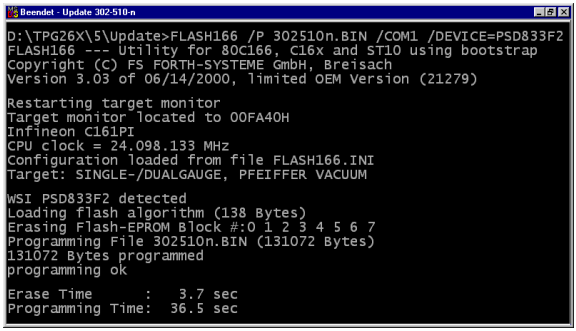

Starting the TPG 261 with the updated firmware

If the program transfer was successful, quit the Update mode by turning the TPG 261 off.

Wait at least 10 s before turning the TPG 261 on again in order for it to correctly initialize itself.

✓ The TPG 261 is now ready for operation. To be sure, check that the current parameter settings are identical with the previously defined settings (→ 🗎 71).

D: Literature

📖 [1] www.pfeiffer-vacuum.de
Communication Protocol
SingleGauge™
Single-Channel Measurement and
Control Unit TPG 261
BG 805 198 BE
Pfeiffer Vacuum GmbH, D–35614 Asslar,
Deutschland

📖 [2] www.pfeiffer-vacuum.de
Operating Instructions
Compact Pirani Gauge TPR 265
BG 805 177 BE
Pfeiffer Vacuum GmbH, D–35614 Asslar,
Deutschland

📖 [3] www.pfeiffer-vacuum.de
Instruction Sheet
Compact Pirani Gauge TPR 261
BG 805 105 BE
Pfeiffer Vacuum GmbH, D–35614 Asslar,
Deutschland

📖 [4] www.pfeiffer-vacuum.de
Instruction Sheet
Compact Cold Cathode Gauge IKR 251
BG 805 110 BN
Pfeiffer Vacuum GmbH, D–35614 Asslar,
Deutschland

📖 [5] www.pfeiffer-vacuum.de
Instruction Sheet
Compact Cold Cathode Gauge IKR 261
BG 805 113 BN
Pfeiffer Vacuum GmbH, D–35614 Asslar,
Deutschland

📖 [6] www.pfeiffer-vacuum.de
Instruction Sheet
Compact Cold Cathode Gauge IKR 270
BG 805 115 BE / A
Pfeiffer Vacuum GmbH, D–35614 Asslar,
Deutschland

📖 [7] www.pfeiffer-vacuum.de
Instruction Sheet
Compact FullRange™ Gauge PKR 251
BG 805 119 BN
Pfeiffer Vacuum GmbH, D–35614 Asslar,
Deutschland

[8] www.pfeiffer-vacuum.de
Instruction Sheet
Compact FullRange™ Gauge PKR 261
BG 805 122 BN
Pfeiffer Vacuum GmbH, D–35614 Asslar, Deutschland

[9] www.pfeiffer-vacuum.de
Instruction Sheet
Compact Process Ion Gauge IMR 265
BG 805 132 BE
Pfeiffer Vacuum GmbH, D–35614 Asslar, Deutschland

[10] www.pfeiffer-vacuum.de
Instruction Sheet
Compact FullRange™ BA Gauge PBR 260
BG 805 131 BE
Pfeiffer Vacuum GmbH, D–35614 Asslar, Deutschland

[11] www.pfeiffer-vacuum.de
Instruction Sheet
Compact Capacitance Gauge
CMR 261 … CMR275
BG 805 133 BE
Pfeiffer Vacuum GmbH, D–35614 Asslar, Deutschland

[12] www.pfeiffer-vacuum.de
Instruction Sheet
Compact Piezo Gauge APR 250 … APR 267
BG 805 127 BN
Pfeiffer Vacuum GmbH, D–35614 Asslar, Deutschland

E: Index

– A –

A/D converter test 62

– B –

Baud rate 54

– C –

Calibration factor 41
Cleaning 65
Conformity 80
Connectors
  control 21
  mains power 19
  relay 22
  RS232 23
  sensor 20
Contact positions
  control 21
  relay 22
Contents 4
control connector 21
Conversion 70

– D –

Default settings 55; 71
Degas 46
Display
  resolution 55
  test 61
Disposal 69

– E –

EEPROM test 61
EPROM test 60
Error messages 66

– F –

Factory settings 55; 71
Filter 39
Firmware
  update 72
  version 2; 58

– G –

Gauge connector 20
Gauge control 47
  gauge activation 49
  gauge deactivation 50
  OFF threshold 51
Gauge identification 30
Gauge parameters 38
  calibration factor 41
  Degas 46
  measurement range 42
  measurement value filter 39
  offset 43
  underrange control 44
General parameters 52
  default settings 55
  display resolution 55
  measurement units 54
  transmission rate 54

– I –

I/O test 63
Identification of gauges 30
Intended use 3
Interface
  connector 23
  test 64
  transmission rate 54

– K –

Keylock 59

– L –

Liability 8
Literature 76

– M –

Mains power connector 19
Maintenance 65
Measurement mode 27
  gauge identification 30
  status messages 28
  turning the gauge on/off 28
Measurement range 42
Measurement units 54
  conversion 70
Measurement value filter 39

– O –

OFF threshold 51
Offset 43
Operating modes
  Measurement mode 27
  overview 26
  Parameter mode 31
  Program transfer mode 72
Operation
  power off 25
  power on 25

– P –

Parameter mode 31
  Gauge control 47
  Gauge parameters 38
  General parameters 52
  Switching function parameters 33
  Test parameters 56
Pin assignment
  control 21
  relay 22
  RS232 23
Power connector 19
Power off 25
Power on 25
Pressure units 54
  conversion 70
Program
  update 72
  version 2; 58

– R –

RAM test 60
relay connector 22
Repair 68
RS232
  connector 23
RS232C
  test 64

– S –

Safety 6
Scope of delivery 3
sensor connector 20
Serial interface
  connector 23
Status messages 28
Storage 68
Switching function parameters 33
Switching functions 22; 35; 36
Symbols 6

– T –

Test parameters 56
Test program 56
  A/D converter test 62
  display test 61
  EEPROM test 61
  EPROM test 60
  firmware version 58
  I/O test 63
  keylock 59
  RAM test 60
  RS232C test 64
  Torr lock 59
  watchdog 59
Thresholds 35; 36
Torr lock 59
Transmission rate 54
Troubleshooting 66

– U –

Underrange control 44
Units
  conversion 70
Update 72

– V –

Validity 2

– W –

Warranty 8
Watchdog 59

Declaration of Conformity

We, Pfeiffer Vacuum, hereby declare that the equipment mentioned below complies with the provisions of the Directive relating to electrical equipment designed for use within certain voltage limits 73/23/EEC and the Directive relating to electromagnetic compatibility 89/336/EEC.

Product

SingleGauge™

Single-Channel Measurement and Control Unit for Compact Gauges

TPG 261

Part number

PTG28030

Standards

Harmonized and international/national standards and specifications:

- EN 61010-1 (Safety requirements for electrical equipment for measurement, control and laboratory use)
- EN 50081-1 (Electromagnetic compatibility generic emission standard)
- EN 50082-2 (Electromagnetic compatibility generic immunity standard)

Signature

Pfeiffer Vacuum GmbH, Asslar

9 May 2001

Wolfgang Dondorf
Managing director

Notes

Notes

Notes

PFEIFFER VACUUM

Emmeliusstrasse 33
D–35614 Asslar
Deutschland
Tel +49 (0) 6441 802-0
Fax +49 (0) 6441 802-202
info@pfeiffer-vacuum.de

www.pfeiffer-vacuum.de

Original: German BG 805 195 BD (0110)

bg805195be/ a